HAVENER
ENTERPRISES Inc.

Stand-On Hydro Drive Commercial Mower
36" • 48" • 52"

OWNER'S MANUAL & PARTS LIST

Table of Contents

About This Manual 3

Warranty 4

Safety Information
- Before Using Equipment 5
- Operation of Equipment 6
- Safety Information Decals 7

Operating the Mower
- Operating Controls 8
- Starting the Engine 9
- Moving the Mower 9
- Height-of-Cut 11
  - Changing the Height-of-Cut 11
  - Measuring the Height-of-Cut 11
  - Removing and Adjusting the Blades 11
  - Adjusting the Front Wheels 11
  - Adjusting the Deck 12

General Maintenance
- Maintenance Schedule 13
- Fuel and Engine Oil 14
- Air Filter 14
- Tire Pressure 14
- Blades 14
- Cleaning the Mower 14
- Lubrication Points 15

Service Adjustments
- Engine to Blade Belt Adjustments 16
- Blade to Blade Belt Adjustment 17
- Engine to Hydro Transmission Belt Adjustment 18
- Safety Interlock System 18

Troubleshooting Guide 19

Parts List
- Frame Assembly 20
- Front Deck Assembly 22
- Transmission Drive Assembly 26
- Brake and Wheel Assembly 28
- Handle Control Assembly 30
- Rear Deck Assembly 32
- Front Caster Assembly 34
- Fuel Tank Assembly 35
- Standing Platform Assembly 36

Product Registration 39

© Havener Enterprises, Inc.

About This Manual

Congratulations on the purchase of your new Bradley commercial mower. We at Havener Enterprises, Inc. are confident that this mower will provide you with years of excellent performance, durability, and trouble-free service when operated and maintained as directed in this manual.

This owner's manual is considered a permanent part of the mower. It must be available to all of the operators and/or person(s) servicing the mower. Should the mower be resold, this manual must remain with the mower.

All information, illustrations, and specifications contained in this manual were in effect at the time of publication. Havener Enterprises, Inc. reserves the right to change, modify, and/or discontinue specifications and/or design without notice. If there is a change that has been made to your mower which is not shown or reflected in this manual, please see your authorized Bradley dealer before operating and/or servicing the equipment.

Should you ever have any questions regarding the operation, maintenance, or safety of your mower, please contact your authorized Bradley dealer who has been specially trained on operation and service of Bradley Commercial Lawn Mowers.

A space has been provided below to record information about your new Bradley Commercial Lawn Mower. Please take time to record such information for future reference, especially when you contact an Authorized Bradley dealer with questions.

Date Purchased: _____

Model Number: _____

Serial Number: _____

Place of Purchase: _____

_____

WARRANTY STATEMENT

Bradley Commercial Lawn Mowers are warranted for one (1) year for the original date of purchase against defects in material or workmanship, when operated and maintained in accordance with the Bradley Owner's Manual. Havener Enterprises, Inc. will replace or repair, free of charge, any part of the original equipment returned to us or our authorized servicing representative with transportation or postage prepaid and upon examination deemed defective. The cost of replacing items subject to normal wear, such as but not limited to: air filters, batteries, belts, blades, oil filters, and tires will be borne by the purchaser/owner unless such wear was caused by a defect in material and workmanship. The Pumps and Engines are warranted by their respective manufacturer(s). Please see engine owner's manual for engine warranty.

This warranty does not cover any mower that has been subject to neglect, negligence, misuse, or accident, or that has been operated in any way contrary to the operating instructions as specified in the Bradley Owner's Manual. This warranty does not cover any mower that has been altered or modified changing its performance or durability. In addition, the warranty is not extended to repairs made necessary by the use of parts or accessories which, in the reasonable judgment of Havener Enterprises, Inc. are incompatible with the mower or adversely affect its operation, performance, or durability.

Havener Enterprises, Inc. assumes no responsibility or incidental, consequential, or other damages including, but not limited to, expense for gasoline, expense of delivering the mower to a Bradley authorized dealer and expense of returning it to the owner, mechanic's travel time, telephone or communication charges, rental of a like product during the time warranty repairs are being performed, travel, loss or damage to personal property, loss of revenue, loss of the use of the time or inconvenience. There are no other expressed or implied warranties and liability for consequential damages under this warranty and are excluded to the extent exclusions are permitted by law.

No warranty service will be authorized until your product registration has been received by Havener Enterprises, Inc.

Safety Information

Read This Manual Carefully and Thoroughly Before Operating Your Mower!

1. Carefully and thoroughly read the owner's manual. Allow adequate time to fully understand the controls and operation of the equipment. Never allow anyone to operate the mower that has not read and fully understood the owner's manual.
2. Never allow anyone to operate the mower who is not old enough, large enough, and strong enough to safely handle the machine.
3. Do not carry passengers. Avoid mowing while people, especially children, and pets, are nearby since rotating blades can throw rocks and other items with enough force to cause serious injury.

Before Using Equipment

Operator

Wear protective clothing while mowing. Long trousers and safety glasses will help reduce the risk of injury from thrown objects. It is recommended that steel toe shoes with aggressive soles or some other type of substantial footwear be worn to help protect your feet and maintain traction on slopes or uneven ground.

Mowing Area

Thoroughly inspect the area where the equipment is to be used. Look for items such as stones, sticks, bones, wire, and other foreign objects. When struck by the mower, these and other objects may become projectiles that could lead to serious injury and/or death.

Mower

For your safety and the long life of your mower, always inspect the mower before each use. Before inspection, make sure the mower is on a flat and level surface, the blades are disengaged, the ignition switch off with the key removed, and the spark plug wire is off of the spark plug(s) and hidden so that accidental contact cannot be made.

General Condition

- Walk around the mower looking for any fluid spills or leaks on or underneath the mower. Remove any and all excessive debris, dirt, and/or fluids.
- Look for signs of damage or excessive wear. Check the tightness of all nuts, bolts, pins, and screws. Tighten any that may be loose and replace any that may have been lost during use.
- Be sure the safety interlock controls are operating properly so that the engine cannot be started unless the ground speed control lever is in neutral and the blades disengaged.
- Check the mower blades for any damage or abnormal wear and replace in sets so that they are balanced.
- Check the mower cutting height to assure a high quality and even cut. See pages 11 & 12 for details.
- Check the tire pressure on all four (4) tires. See page 14 for details.
- Check all belts for proper wear and correct tension. See pages 16-18 for details.
- Check engine oil and air filter as recommended in the engine manufacturer's operators manual.

Operation of Equipment

1. **DANGER: GASOLINE IS HIGHLY FLAMMABLE AND EXPLOSIVE. DO NOT ADD FUEL WHILE THE ENGINE IS RUNNING OR IS HOT. KEEP OPEN FLAMES, SPARKS, AND HEAT AWAY FROM THE FUEL AND STORE FUEL IN CONTAINERS SPECIFICALLY DESIGNED FOR THAT PURPOSE. ADD FUEL OUTDOORS ONLY AND IF THE FUEL IS SPILLED, DO NOT START THE ENGINE. MANUALLY PUSH THE MOWER AWAY FROM THE SPILL AND IMMEDIATELY WIPE UP.**
2. **DANGER: GASES EMITTED BY A CHARGING BATTERY ARE EXPLOSIVE. KEEP HEAT, SPARKS AND OPEN FLAMES AWAY FROM A CHARGING BATTERY.**
3. Do not operate the engine in a confined space where dangerous carbon monoxide fumes can collect. Carbon monoxide is odorless, tasteless, and can be fatal.
4. Mow only in daylight.
5. Make sure the mower is in neutral and the blades are disengaged before attempting to start the engine.
6. Do not stop or start suddenly when going uphill. Never use riding attachments on slopes since there is an increased risk that they might roll over.
7. Avoid steep slopes and use extreme caution when changing directions or speed when operating on a slope.
8. Be extremely careful when operating on a slope or when the grass is damp or wet. Reduced traction could cause sliding. Never mow by pulling the mower back towards you as you might slip.
9. Watch for traffic when crossing surfaces other than grass (i.e. transporting), loading a trailer or vehicle, or when the mower is not in use.
10. Never operate the mower with defective guards, shields, or without the safety devices securely mounted in place.
11. Never direct discharge of material toward bystanders or allow anyone near the mower while in operation.
12. Do not change the engine governor settings or over-speed the engine.
13. Always stop the engine whenever you leave the mower, even for a moment.
14. To help reduce the risk of a fire hazard, keep the engine and the area around the engine free of grass, leaves, or any other type of foreign material.
15. Beware of cutting edges. Always wear gloves for safety when performing blade maintenance activities. Beware on multiple blade units since the rotation of one blade may cause the rotation of the other blades.
16. Keep body and hands away from pin holes or nozzles that eject hydraulic fluid since fluid escaping under pressure may have sufficient force to penetrate skin and cause serious injury. If foreign fluid is injected into the skin, it must be surgically removed within a few hours by a doctor familiar with this form of injury. Always use paper or cardboard and not hands to search for leaks.

SAFETY INFORMATION DECALS

The following labels are intended to alert you to potential hazards and to provide you with important safety information. Should these decals become difficult to read or are missing from the mower, contact your Bradley dealer for a replacement.

OPERATING THE MOWER

It is recommended that before you operate the mower, you allow adequate time to fully understand the controls and operation of the equipment. When reading this manual, it is recommended that you do so with the equipment nearby for quick orientation, to reference the controls, and understand maintenance adjustments.

OPERATING CONTROLS

Before continuing to read the manual, it is recommended that you take adequate time to identify the controls of the mower.

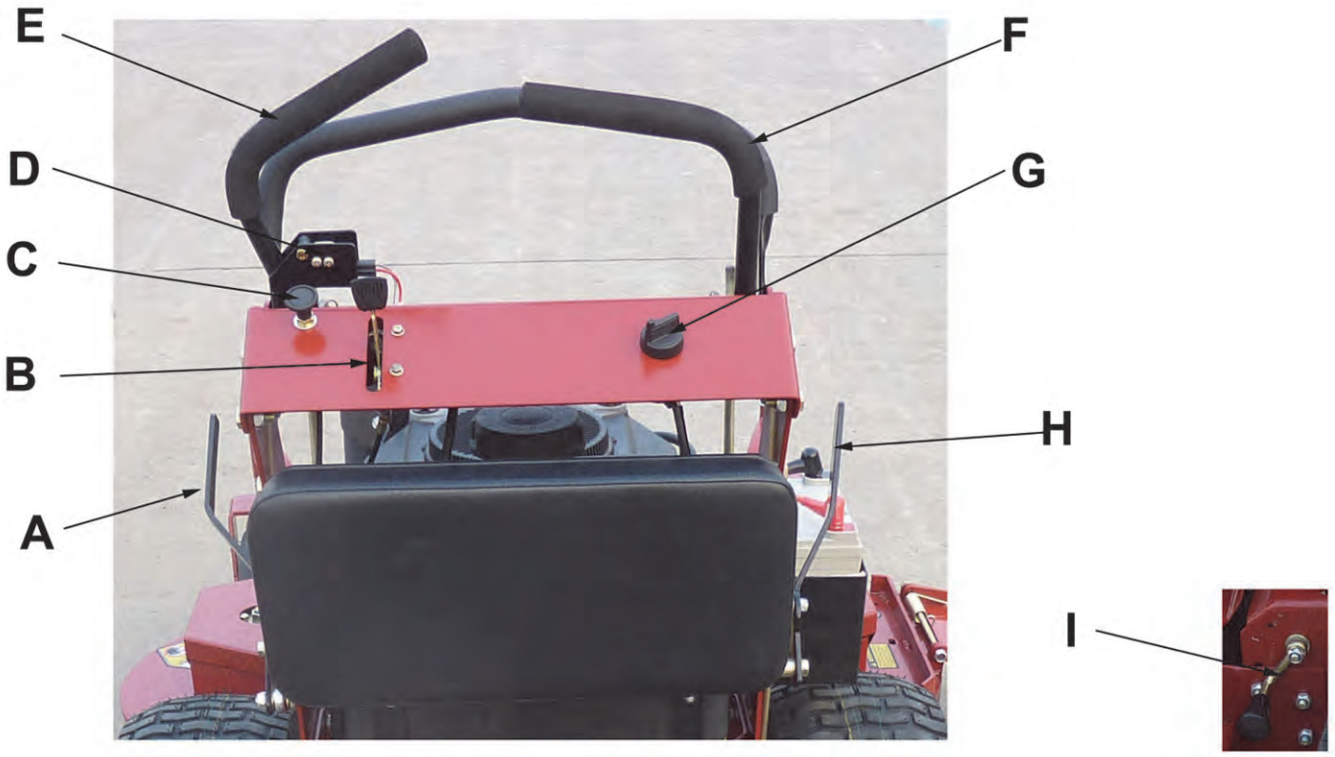

A	Blade Control Lever	**F**	Right Control Lever
B	Throttle Control	**G**	Ignition/Key Switch
C	Choke Control	**H**	Parking Brake Lever
D	Safety Switch	**I**	Neutral Lever
E	Left Control Lever		

STARTING THE ENGINE (Make Sure Bettery Is Fully Charged)

DANGER: DO NOT OPERATE THE ENGINE IN A CONFINED SPACE WHERE DANGEROUS CARBON MONOXIDE FUMES CAN COLLECT. CARBON MONOXIDE IS ODORLESS, TASTELESS, AND CAN BE FATAL.

After going through the steps on pages 5 and 6, you are ready to start the engine. NOTE: THIS UNIT WAS SHIPPED WITHOUT GAS, BE SURE TO ADD FRESH GAS AND DOUBLE CHECK THE OIL IN THE ENGINE BEFORE ATTEMPTING TO START THE MOWER.

1. Make sure the fuel shut-off valve, located at the bottom of the fuel tank is in the "ON" position.
2. Make sure the Parking Brake Lever is in the "ON" position.
3. Make sure the Neutral lever is disengaged.
4. Make sure the Blade Control Lever is in the "OFF" position.
5. Slide the Throttle Control to the position or to "Choke" if the engine is cold.
6. For Electric Start engines, turn the key clockwise to the "Start" position. Once started, the key will return to the "Run" position. Note: Do not keep the key in the "Start" position more than a few seconds. If engine does not start, wait 15 seconds before trying again.
7. For Pull Start engines, turn the key clockwise to only the "Run" position.
8. Test the pull start cord by slowly pulling it until just past compression. Stop and return the start cord and then pull firmly with a smooth, steady motion to start the engine.
9. Once the engine is running, slowly move the Throttle Control out of the "Choke" position to the desired engine speed.

MOVING THE MOWER FORWARD

CAUTION **BECOME COMPLETELY FAMILIAR WITH THE OPERATION AND CHARACTERISTICS OF THE MOWER BEFORE ATTEMPTING TO USE IT.**

1. Make sure the Left Control Lever is down out of the Neutral Lock position.
2. Gently push the controls forward. Push the Left and Right Control Levers away from you an equal amount to go straight. It is recommended you start slow and increase your speed as you increase your comfort with the controls.
3. Allowing the Left and Right Control Levers to return to a center neutral position allows the mower to stop moving. Note: if the operator lets go of the Left Control Lever while the blades are engaged and/or the mower is moving, the safety interlock system will stop the engine. To restart the mower, reset the Blade Control Lever to "Off" and the parking brake to the "On" position.

NOTE: Top speed is suggested only for transport.

MOVING THE MOWER IN REVERSE

Slowly and evenly pull the Left and Right Control Levers toward you. The more the Control Levers are pulled toward you, the faster you will move. It is recommended to move in reverse slowly.

NOTE: When moving in reverse, be aware of your surroundings by looking down and behind.

STOPPING THE MOWER

Gently let the Left and Right Control Levers return to their neutral, at rest position. If the operator is leaving the operator position for any reason, disengage the blades, shut off the engine, engage the parking brake, and remove the key.

NOTE: Park the mower on level ground. If it is not possible to do so, be sure to the block the wheels to prevent the mower from rolling away.

TURNING THE MOWER

To turn the mower in the desired direction, gently pull the chosen direction's Control Lever toward you (i.e. to turn right, pull the Right Control Lever toward you). The more a particular Control Lever is pulled toward you, the sharper the turn the mower will make.

MOWING

⚠ DANGER: THOROUGHLY INSPECT THE AREA WHERE THE MOWER IS TO BE USED. LOOK FOR ITEMS SUCH AS STONES, STICKS, WIRE, AND OTHER FOREIGN OBJECTS. WHEN STRUCK BY THE MOWER, THESE AND OTHER OBJECTS MAY BECOME PROJECTILES THAT COULD LEAD TO SERIOUS INJURY AND/OR DEATH. CLEAR AREA OF ALL DEBRIS AND KEEP PEOPLE AND PETS AWAY.

⚠ DANGER: DO NOT OPERATE THE MOWER WITH DEFECTIVE GUARDS OR SHIELDS. DO NOT OPERATE THE MOWER WITHOUT THE SAFETY DEVICES SECURELY IN PLACE.

For the highest quality of cut and performance, mow with the engine at full throttle. Quality of cut may be determined by the ground speed and speed of the mower. Generally, the slower the mower travels across the terrain, the better the cut.

1. With the engine running and the mower placed at the beginning of the area to be mowed, make sure the left control level is down and out of the neutral lock position.
2. Push the Blade Control Lever forward to the "On" position to engage the blades.
3. To disengage blades, come to a complete stop and pull the Blade Control Lever to the "Off" position.

MOVING THE MOWER WITH THE ENGINE OFF

1. Engage the Parking Brake Lever by moving it to the "On" position.
2. Engage the Neutral Lever by moving it in the direction of the arrow.
3. Disengage the Parking Brake Lever by moving it to the "Off" position.
4. Move the mower. **NOTE: Be careful of the weight of the mower as you move it without using the engine.**
5. Before starting the mower,mark sure the drving controls are in neutral with left control in "up" position, the parking brake is engaged and the neutral lever is disengaged.

PARKING THE MOWER

Pull the Parking Break Lever to the "On" position. NOTE: Gently engage the braking mechanism. Excessive force may cause damage.

CAUTION **IF YOU ARE NOT FAMILIAR WITH THE OPERATION OF THE HYDRO DRIVE AND ZERO TURN FEATURE, PRACTICE TURNING AND MANUEVERING WITH THE CONTROLS BEFORE ENGAGING THE BLADE**

HEIGHT-OF-CUT

CHANGING THE HEIGHT-OF-CUT

DANGER: BEFORE MAKING ANY ADJUSTMENTS AND/OR SERVICING YOUR MOWER, MAKE SURE THE MOWER IS ON LEVEL GROUND, THE BLADES DISENGAGED, THE KEY REMOVED, AND THE ENGINE OFF WITH THE SPARK PLUG WIRE(S) REMOVED FROM THE SPARK PLUG(S) TO PREVENT ACCIDENTAL CONTACT.

When your Bradley mower is shipped from the factory, the mowing height is set at 2 1/2". The mowing height may be raised or lowered using a combination of front wheel spacers and blade bolt assembly spacers. It is recommended that you first set your height-of-cut to the highest level using the blade spacers and then lower the height-of-cut using the front wheel spacers.

MEASURING THE HEIGHT-OF-CUT

CAUTION **BEWARE OF THE CUTTING EDGES ON THE BLADES. THE ROTATION OF ONE BLADE MAY CAUSE THE OTHER BLADE(S) TO ROTATE. ALWAYS WEAR WORK GLOVES WHEN HANDLING BLADES.**

1. Park the mower on level ground.
2. With the Blade Control Lever in the "Off" position, the engine off with the key removed, and the spark plug wire(s) removed from the spark plug(s), reach through the discharge chute and slowly rotate the blade so that the length of the blade is going from the front of the mower towards the rear.
3. Using a measuring device, measure the distance from the front tip of blade's cutting edge to the ground. As a general rule, if measuring the cutting height on a hard surface such as concrete, the mower will usually mower about 1/4" lower in the grass due to the weight of the machine.

REMOVING AND ADJUSTING THE BLADES

CAUTION **BEWARE OF THE CUTTING EDGES ON THE BLADES. THE ROTATION OF ONE BLADE MAY CAUSE THE OTHER BLADE(S) TO ROTATE. ALWAYS WEAR WORK GLOVES WHEN HANDLING BLADES.**

1. Park the mower on level ground and block the rear wheels to prevent accidental rollback.
2. Raise the front end of the mower using a jackstand.
3. Using two (2) 15/16" box end wrenches, use one wrench to loosen nut "A" while holding blade bolt "C" with the other wrench.
4. Slide the blade bolt down through the mower deck and out.
5. To raise the blades to the height desired, remove the appropriate amount of spacers from the blade bolt. Example: IF the height of cut needs to be raised 1/2", move two (2) of the 1/4" spacers "B" on each blade from underneath the mower (Figure 1) to the top of the mower (Figure 2).
6. Reinsert the blade bolt through the cutting deck.
7. Install the blade spacers that were removed back onto the blade bolt followed by the nut and tighten. **IMPORTANT**: The amount of spacers should always be the same on each blade bolt. Never put the spacers below the blade.

ADJUSTING THE FRONT WHEELS (FIGURE 3)

1. Raise and support the front of the mower with a jackstand.
2. While supporting the front wheel with one hand, remove the lynch pin from the wheel shaft.
3. Remove the wheel from the front wheel support arm while being careful not to lose the spacers.
4. Remove the amount of spacers desired to lower the height-of-cut.
5. Reinsert the wheel through the support arm.
6. Reinstall the spacers removed from the bottom onto the top and then replace the lynch pin.
7. To raise the height, repeat steps 1 through 3 but take the spacers from above the wheel support arm and place them below.

ADJUSTING THE DECK (FIGURE 4)

Changes to the height-of-cut can be achieved by repositioning the cutter deck. There are six positions available. This adjustment will also affect the pitch of the deck. NOTE: The pitch is the angle of the blades when compared from front to rear. A 1/4" downward pitch (with the front of the deck down) is recommended for the best cutting performance.

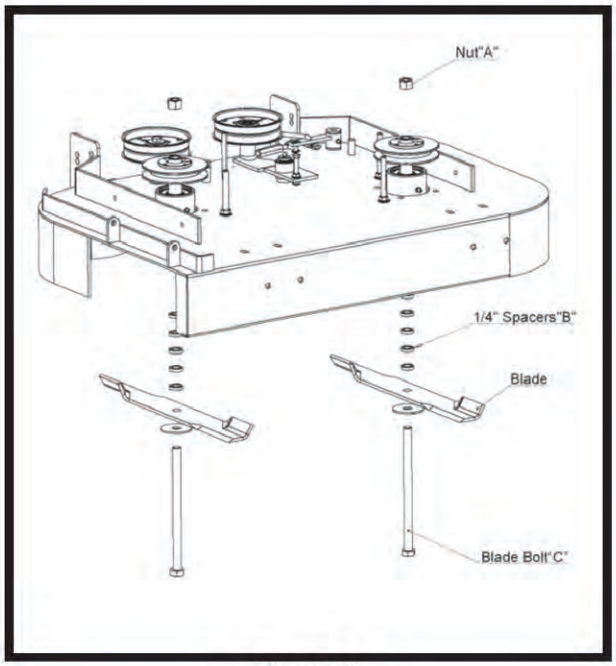

Figure 1

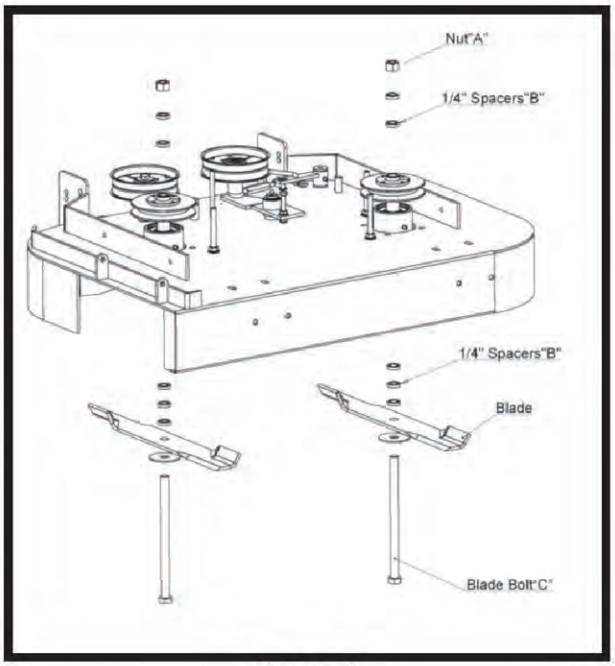

Figure 2

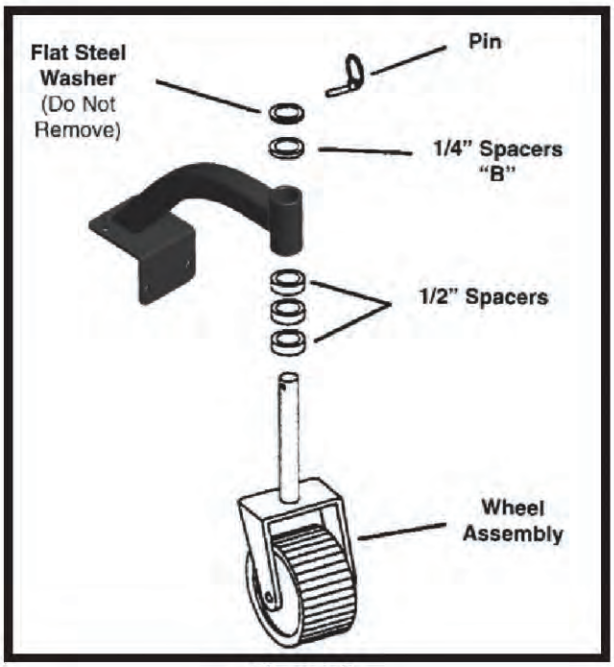

Figure 3

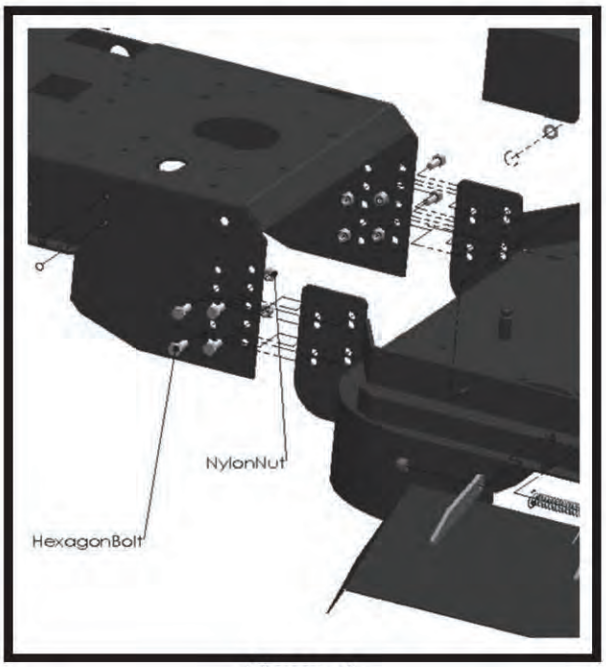

Figure 4

General Maintenance

Proper maintenance and adjustment of your Bradley hydro mower is necessary to keep the mower in good, working and safe condition. The maintenance of the mower is the responsibility of the owner/operator and must be performed at regular intervals. When replacing any parts or servicing your mower, be sure to use only genuine Bradley mower replacement parts to ensure quality performance of your mower.

DANGER: BEFORE MAKING ANY ADJUSTMENTS AND/OR SERVICING YOUR MOWER, MAKE SURE THE MOWER IS ON LEVEL GROUND, THE BLADES DISENGAGED, THE KEY REMOVED, AND THE ENGINE OFF WITH THE SPARK PLUG WIRE(S) REMOVED FROM THE SPARK PLUG(S) TO PREVENT ACCIDENTAL CONTACT. IF ADJUSTMENT OR MAINTENACE IS BEING PERFORMED AFTER OPERATION OF THE MOWER, ALLOW THE UNIT TO COOL AS HEAT BUILDUP COULD CAUSE SEVERE BURNS.

Maintenance Schedule

Item	Procedure	Time Interval				
		Break-In (first 5 hours)	Every 8 hours (Daily)	Every 40 hours (Weekly	Every 100 hours (Bi-weekly)	Every 200 hours (Monthly)
Belts	Inspect (adjust as needed)	✓	✓			
Blades	Inspect and Sharpen		✓			
Engine Air Filter	Inspect (see engine owner's manual)		✓			
Engine Cooling Areas	Clean (see engine owner's manual)				✓	
Engine Oil	Check (see engine owner's manual)		✓			
	Change (see engine owner's manual)	✓			✓	
Engine Oil Filter	Change (see engine owner's manual)	✓				✓
Engine Spark Plug(s)	Inspect (see engine owner's manual)					✓
Fuel Filter	Replace				✓	
Fuel Line	Check				✓	
	Replace	every 2 years				
Grease Fittings	Refer to page 15					
Hardware	Check for proper tightness	✓		✓		
Mower Main Frame	Remove debris from under belt cover		✓			
	Power wash engine mower			✓		
Safety Interlock System	Check operation and switches		✓			
Tires	Check air pressure		✓			
Battery	Charge battery if not used for 30 days					✓

Fuel

DANGER: GASOLINE IS HIGHLY FLAMMABLE AND EXPLOSIVE. DO NOT ADD FUEL WHILE THE ENGINE IS RUNNING OR IS HOT. KEEP OPEN FLAMES, SPARKS, AND HEAT AWAY FROM THE FUEL AND STORE FUEL IN CONTAINERS SPECIFICALLY DESIGNED FOR THAT PURPOSE. ADD FUEL OUTDOORS ONLY AND IF FUEL IS SPILLED, DO NOT START THE ENGINE. MANUALLY PUSH THE MOWER AWAY FROM THE SPILL AND WIPE UP IMMEDIATELY.

Refer to the Engine Owner's Manual for the type of fuel to use.

A fuel shut off valve is located on the bottom of the fuel tank. It is recommended that the fuel valve be shut off when transporting between job sites and when storing the mower for extended periods of time.

Engine Oil

NOTE: CHECK THE ENGINE OIL BEFORE EACH USE. Refer to the Engine Owner's Manual for the type of oil, oil change intervals, and the proper procedures to check and change oil.

Air Filter

Refer to the Engine Owner's Manual for recommended maintenance.

Tire Pressure

The recommended tire pressure for the two drive wheels is 28 P.S.I. The recommended tire pressure for the two front wheels is 22 P.S.I. Incorrect tire pressure may cause the mower to pull to one side and/or cause an uneven cut. **Always use caution when filling the tire and never exceed the recommended tire pressure.**

Blades

DANGER: BEFORE WORKING ON THE BLADES, MAKE SURE THE ENGINE IS OFF, KEY REMOVED, AND THE SPARK PLUG(S) WIRES REMOVED FROM THE SPARK PLUG(S) TO PREVENT ACCIDENTAL CONTACT.

BEWARE OF THE CUTTING EDGES ON THE BLADES. THE ROTATION OF ONE BLADE MAY CAUSE THE OTHER BLADE(S) TO ROTATE. ALWAYS WEAR WORK GLOVES WHEN PERFORMING BLADE MAINTENANCE.

CAUTION

Blades should be inspected on a daily basis for nicks, bends, and/or excessive wear. If the blades are worn, cracked, bent, or damaged, replace with a new blade immediately before using the mower. Use only genuine Bradley replacement blades as substitute blades may not meet Bradley mower specifications and may be dangerous.

To remove the blades, refer to: page 11, "Removing and Adjusting the Blades."

When sharpening the blades, sharpen only the cutting edges and try to maintain the original angle of the blade. Do not make the cutting edge "razor sharp." Remove the same amount from each side of the blade so that balance is maintained.

Cleaning the Mower

It is recommended that the mower be cleaned on a daily basis. Excessive accumulation of dirt, debris, oil, etc. causes premature wear on the components and may present a potential safety hazard.

LUBRICATION POINTS

To ensure proper lubrication on moving parts, it is recommended that you lubricate the following components with a high-quality EP2 high-temperature based grease or equivalent. Should the conditions of operation be more severe than normal, the lubrication interval may be shorter than recommended. GRT/OPE Grease is the recommended lubricant.

Blade Bell Crank
Every 40hrs/Weekly

Rear Deck Arm Pivot
Every 40hrs/Weekly

Link Idler Arm Pivot
Every 40hrs/Weekly

Blade Engagement Pivot
Every 40hrs/Weekly

Front Caster Support
Right and Left Side
Every 40hrs/Weekly

Front Caster Wheel
Left and Right Side
Every 40hrs/Weekly

SERVICE ADJUSTMENTS

DANGER: BEFORE MAKING ANY ADJUSTMENTS AND/OR SERVICING YOUR MOWER, MAKE SURE THE MOWER IS ON LEVEL GROUND, THE BLADES DISENGAGED, THE KEY REMOVED, AND THE ENGINE OFF WITH THE SPARK PLUG WIRE(S) REMOVED FROM THE SPARK PLUG(S) TO PREVENT ACCIDENTAL CONTACT. IF ADJUSTMENT OR MAINTENACE IS BEING PERFORMED AFTER OPERATION OF THE MOWER, ALLOW THE UNIT TO COOL AS HEAT BUILDUP COULD CAUSE SEVERE BURNS.

ENGINE TO BLADE BELT ADJUSTMENT FOR 36" MOWER (FIGURE 5)

1. Remove the deck cover and move the blade control lever on the control console to the "ON" position.
2. With approximately 10 pounds of pressure being applied on the engine to blade belt midway between the pulleys, the belt should move approximately 1/2".
3. If the belt moves more than 1/2", move the blade control lever back to the "OFF" position.
4. Remove cotter pin "A" and the flat washer from blade rod "D" and pull the blade rod from idler arm "C."
5. Loosen the nut and rotate turn buckle tube "B" clockwise, or towards, the rear of the idler pulley approximately 2 to 3 turns. Tighten the nut. Reinsert blade rod "D" back into idler arm "C" and secure with the flat washer and cotter pin.
6. Repeat steps 1 and 2 to check for proper tension. If more tension is needed, repeat steps 3-5 until the proper tension is achieved.
7. Move the blade control lever on the control console to the "OFF" position, check that the brake pad is against the pulley, if not adjust nut "E". Move the blade control lever to the "ON" position and check that the brake pad cannot touch the pulley.
8. Replace the deck cover.

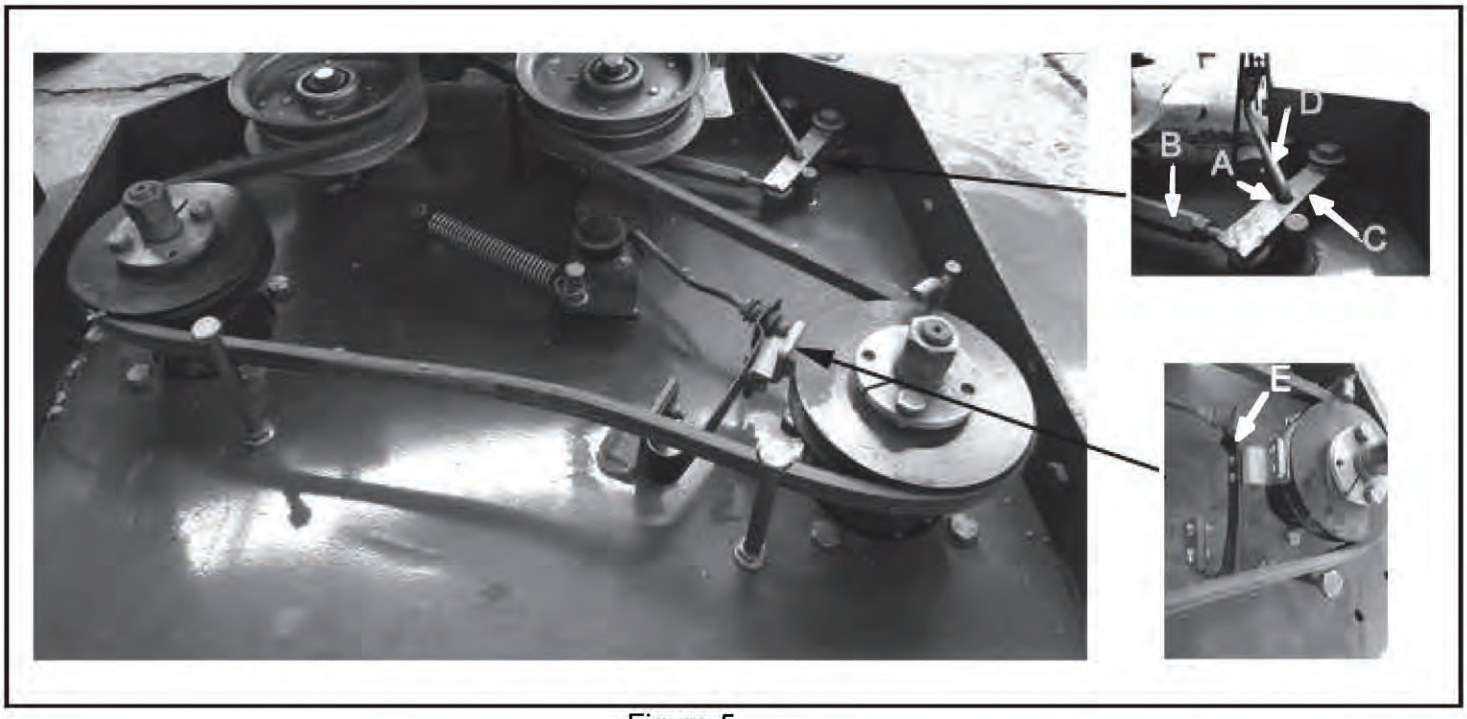

Figure 5

ENGINE TO BLADE BELT ADJUSTMENT FOR 48" AND 52" MOWER (FIGURE 6)

1. Remove the deck cover and move the blade control lever on the control console to the "ON" position.
2. With approximately 10 pounds of pressure being applied on the engine to blade belt midway between the pulleys, the belt should move approximately 1/2".
3. If the belt moves more than 1/2", move the blade control lever back to the "OFF" position.
4. Remove cotter pin "A" and the flat washer from swivel "B" and pull the swivel from idler arm "C".
5. Loosen the nut and rotate turn buckle tube "B" clockwise, or towards, the rear of the idler pulley approximately 2 to 3 turns. Tighten the nut. Reinsert blade rod "D" back into idler arm "C" and secure with the flat washer and cotter pin.
6. Repeat steps 1 and 2 to check for proper tension. If more tension is needed, repeat steps 3 – 5 until the proper amount of tension is achieved.
7. Replace the deck cover.

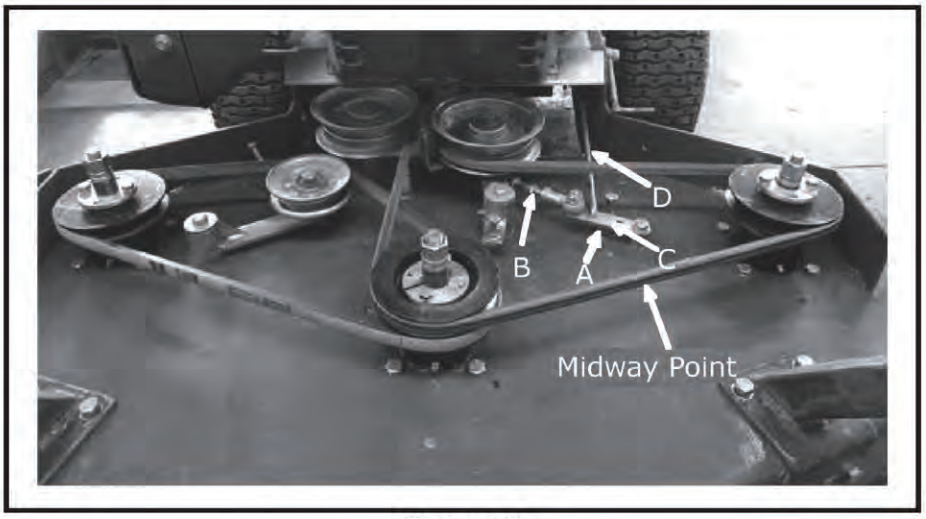

Figure 6

BLADE TO BLADE BELT ADJUSTMENT FOR 48" AND 52" MOWER (FIGURE 7)

1. Remove the deck cover.
2. With approximately 10 pounds of pressure applied on the blade to blade belt, midway between the pulleys, the belt should move approximately 1/2"
3. If the belt moves more than 1/2", loosen nut "F" and turn nut "E" clockwise approximately 1 to 2 turns and then tighten the nuts.
4. Recheck the tension on the blade to blade belt. If it is still loose, repeat step 3. Important: Do not over tighten the blade to blade belt. Over tension can cause premature wear on the belts and blade spindles.
5. Replace the deck cover.

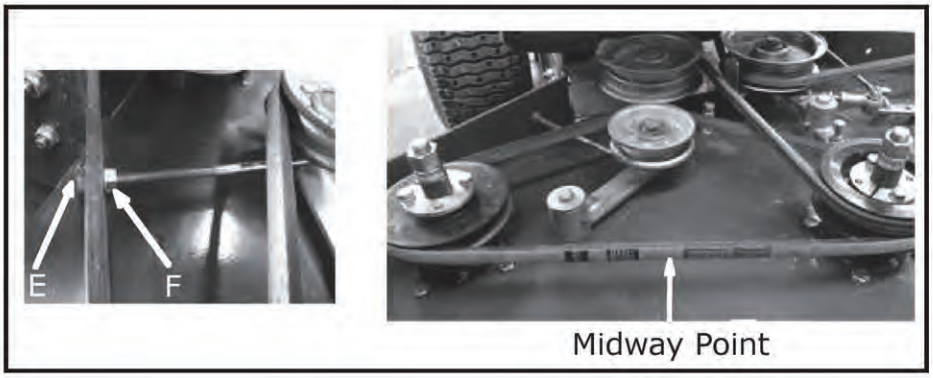

Figure 7

ENGINE TO TRANSMISSION BELT ADJUSTMENT (FIGURE 8)

1. The engine to transmission belt, located underneath the rear deck, should move 1/8" with 5 lbs of pressure applied midway on the belt between the transmission pulley and the engine output shaft pulley.
2. To adjust the belt, loosen nut "A" and turn nut "B" 2 to 3 turns and tighten the nuts.
3. Repeat steps 1 – 2 until the proper tension amount is achieved.

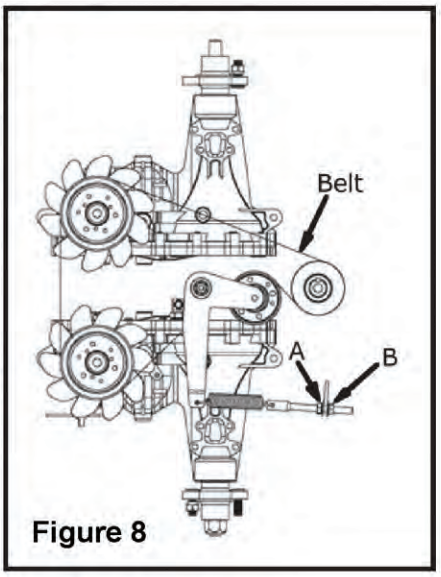

Figure 8

SAFETY SYSTEM ADJUSTMENT

DANGER: DO NOT BYPASS, MODIFY, OR DISCONNECT THE SAFETY SYSTEM. MAKE SURE THAT THE SAFETY INTERLOCK SYSTEM IS FULLY OPEARTIONAL EACH TIME BEFORE MOWING. FAILURE TO DO SO COULD PRESENT DANGER TO YOU AND OTHERS.

1. Move the blade control lever to the "OFF" position.
2. Pull the blade rod from the idler arm
3. Loosen nut "D" and turn the blade rod 1 to 3 turns, reinsert blade rod back into idler arm, and secure it with the flat washer and cotter pin.
4. Check that safety switch "C" is firmly against blade bell crank, if not, repeat steps 2 and 3 until the plunger of switch C is firmly depressed against the blade bell crank. (see Figures 9 - 10)

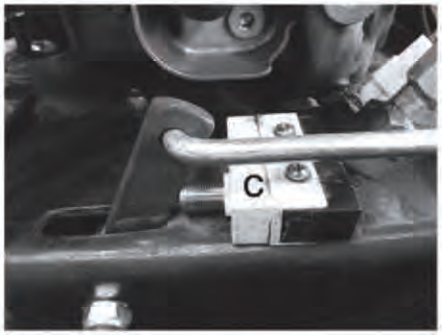

Figure 9

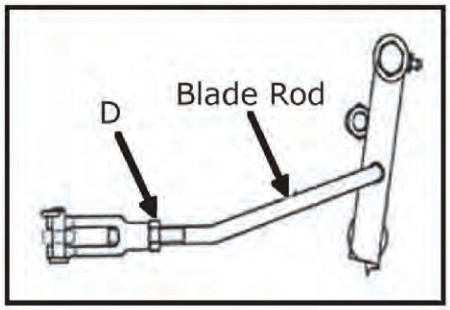

Figure 10

TROUBLESHOOTING

PROBLEM	POSSIBLE CAUSE	SOLUTION
Engine does not start	Parking Brake Lever in "OFF" position	Move lever to "ON" position
Check bettery and make sure battery is fully charged	Blade Control Lever in "ON" position	Move lever to "OFF" position
	Out of fuel	Fill fuel tank
	Fuel shut-off valve closed	Open valve
	Safety interlock switch out of adjustment	Adjust switches
	Spark plug loose or disconnected	Connect spark plug wire
	Faulty spark plug	Replace
	Dirty air filter	Replace
	Clogged fuel filter	Replace
	Bad fuel	Drain and refill with fresh fuel
Engine starts hard or loses power	Dirt or water in the fuel tank	Drain and clean fuel tank
	Clogged or dirty fuel filter	Replace
	Dirty air filter	Replace
	Faulty spark plug	Replace
	Incorrect oil level	Check and adjust
Engine overheats	Dirt in fuel line	Clean and replace
	Dirty grass screen	Clean
	Incorrect oil level	Check and adjust
	Dirty air filter	Check and adjust
	Faulty spark plug	Replace
Mower pulls to one side	Incorrect tracking adjustment	Check and adjust
Blades do not turn	Blade belt broken or slipping	Replace or adjust
	Excessive build-up underneath mowing deck	Check and clean
Rough or uneven cut	Tire pressure not equal	Check and adjust
	Unequal spacer configuration on blades or front casters	Check and adjust
	Mower speed too fast for mowing conditions	Reduce speed
	Blades bent	Check and replace
	Blades dull	Sharpen or replace
	Excessive build-up underneath mowing deck	Check and clean
	Blades installed upside down	Remove and replace in correct direction

36″ Frame Assembly

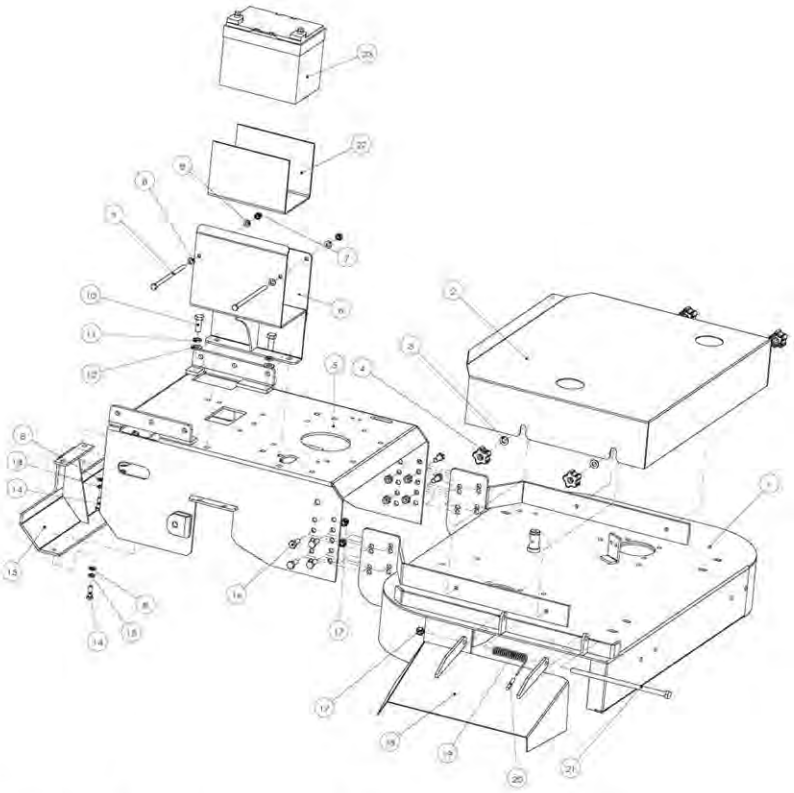

Item NO.	Part Number	Description	Qty
1	336-100	Deck Weldment36	1
2	336-001	Hood36	1
3	200-010	Plain Washer 10 GB95-85	4
4	100-009	Saucer Nut	4
5	336-101a	Rear Deck weldment	1
6	336-102a	Battery Box	1
7	200-030	Nylon Nut M8 GB889-86	2
8	200-021	Plain Washer 8 GB95-85	8
9	200-301	Hexagog bolt M8x155GB5782	2
10	200-302	Hexagog bolt M12x30GB5783	2
11	200-078	Lock12 GB93-87	2
12	200-303	Plain washer 12 GB95	2
13	200-024	Lock Washer 8 GB 93-87	4
14	200-304	Hexagon bolt M8x25 GB5783-86	4
15	336-105	Hydraulic motor guard	1
16	336-173	Connecting Bolt	8
17	200-006	Nylon Nut M10 GB889-86	9
18	100-007	Chute Deflector	1
19	100-008	Torsion Spring	1
20	336-174	Torsion Spring Jacket	1
21	200-005	Hexagon Bolt M10*240 GB5782-86	1
22	WM2836-080	Battery protection rubber pad	1
23	WM2836-071	Bettery	1

48"&52"Frame Assembly

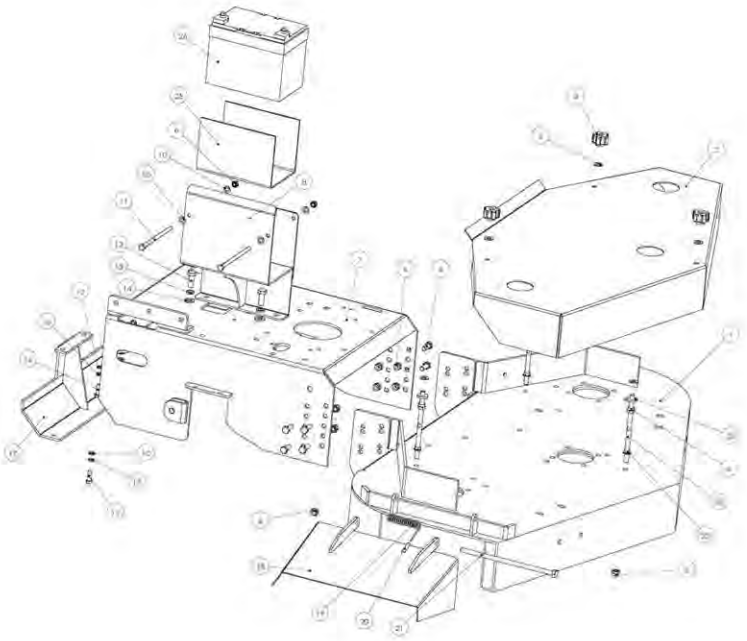

Item NO.	Part Number	Description	Qty
1	348-100	Deck Weldment48	1
	352-100	Deck Weldment52	1
2	348-001	Hood48	1
	352-101	Hood52	1
3	100-009	Saucer Nut	3
4	200-010	Plain Washer 10 GB95-85	6
5	336-173	Connecting Bolt	8
6	200-006	Nylon Nut M10 GB889-86	15
7	336-101a	Rear Deck weldment	1
8	336-102a	Battery Box	1
9	200-030	Nylon Nut M8 GB889-86	2
10	200-021	Plain Washer 8 GB95-85	8
11	200-301	Hexagog bolt M8x155GB5782	2
12	200-302	Hexagog bolt M12x30GB5783	2
13	200-078	Lock12 GB93-87	2
14	200-303	Plain washer 12 GB95	2
15	200-024	Lock Washer 8 GB 93-87	4
16	200-304	Hexagon bolt M8x25 GB5783-86	4
17	336-105	Hydraulic motor guard	1
18	100-007	Chute Deflector	1
19	100-008	Torsion Spring	1
20	336-174	Torsion Spring Jacket	1
21	200-005	Hexagon Bolt M10*240 GB5782-86	1
22	200-016	Nut Flange M10 GB6187-86	3
23	348-105	Stud	3
24	348-106	Shock Pad	3
25	WM2836-080	Battery protection rubber pad	1
26	WM2836-071	Bettery	1

36" Front Deck Assembly

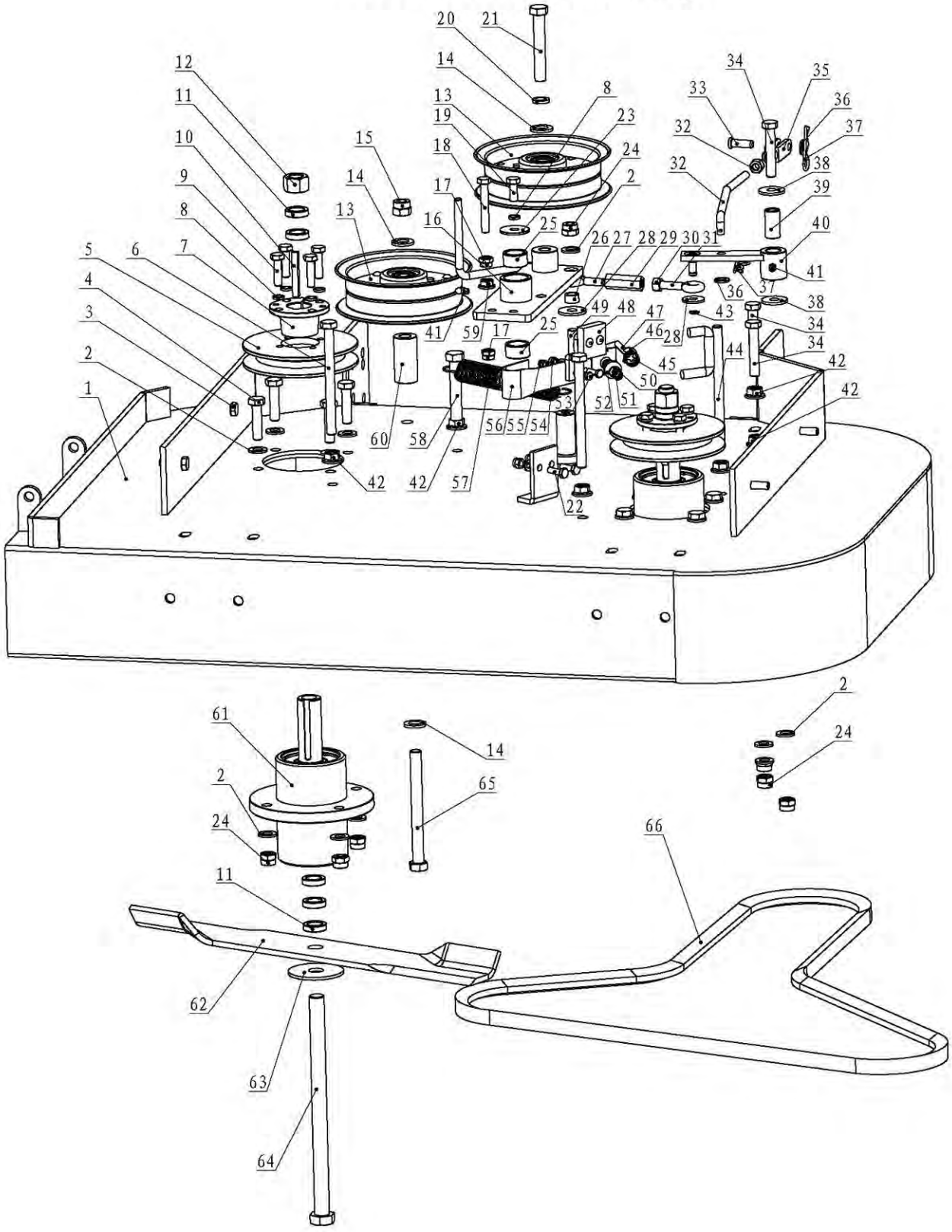

36" Front Deck Assembly

Item No.	Part Number	Description	Qty
1	336-100	Deck Weldment36"	1
2	200-010	Plain Washer 10 GB95-85	23
3	200-003	Hexagon Bolt M10*25 GB5783-86	4
4	200-019	Hexagon Bolt M10*40 GB5782-86	8
5	300-004	Pulley ,Single	2
6	200-028	Hexagon Bolt M10*120 GB5782-86	2
7	100-026	H-Bushing	2
8	200-024	Lock Washer 8 GB 93-87	9
9	200-025	Hexagon Bolt M8*30 GB5783-86	8
10	100-014	Key 6*6.35*50	2
11	100-022	Spacer 6	10
12	200-017	Hexagon Nut M16*1.5	2
13	300-002a	Idler Pulley	2
14	200-303	Plain washer 12 GB95	3
15	200-007	Nylon Nut M12 GB889-86	1
16	336-013a	Blade Idler Arm	1
17	200-030	Nylon Nut M8 GB889-86	2
18	200-179	Hexagon bolt M8x50 GB5783	1
19	200-091	Hexagon bolt M8x20 GB 5783	1
20	200-078	Lock12 GB93-87	1
21	200-306	Hexagon bolt M12x75 GB5782-86	1
22	200-072	Hexagon bolt M6x20 GB5783-86	2
23	336-175	Washer 2.2x9idx32od	1
24	200-006	Nylon Nut M10 GB889-86	16
25	336-176	Bushing,Straight Pivot	2
26	336-177	Link Bushing 8.5*10.5 id*15 od	1
27	336-012a	Dog Bolt LH	1
28	200-098	Plain washer 8GB96	1
29	336-178	Screw Pipe	1
30	200-029	Nut Flange M8 GB6187-86	2
31	336-014a	Dog Bolt RH	1
32	336-010	Belt tension Release lever	1
33	200-307	Clevis pin 8x24 GB/T882-88	1
34	200-068	Hexagon Bolt M10x55GB5782-86	3
35	300-007	Free Bar M8	1
36	200-021	Plain Washer 8 GB95-85	2
37	200-069	Hair Pin Cotter	2
38	200-308	Plain washer 10 GB96	3
39	336-008	Pivot Tube	1
40	336-009	Link Idler Arm	1
41	200-026	Grease Fitting M6 GB1152-89	2
42	200-016	Nut Flange M10 GB6187-86	6
43	200-067	Clip Ring 6GB896	1
44	100-016	Belt Guide,Spindle	1
45	336-017	Spring1	1
46	200-070	Clip Ring 9GB896	1
47	336-016a	Brake connection Rod for Pulley	1
48	336-019	Blake Block	1
49	200-103	Hexagon bolt M10x30GB5783	1
50	200-009	Nylon Nut M6 GB889-86	3
51	200-042	Plain Washer 6 GB95-85	4
52	336-018	Nylon flange Pivot	1
53	200-087	Hexagon Bolt M5x16 GB5783-86	2
54	200-138	Plain washer 5GB95	2
55	200-013	Nylon Nut M5 GB889-86	2
56	336-020	Piece Spring	1
57	300-006a	Spring	1
58	200-020	Hexagon Bolt M10*70 GB5782-86	1
59	200-029	Nut Flange M8 GB6187-86	1
60	336-021	Straight Pivot	1
61	100-021	Cutter Housing Assembly	2
62	136-003	Blade 36 "	2
63	100-023	Plain Washer 3*16.5 id *50 od	2
64	200-023	Bolt M16*1.5*245	2
65	200-309	Hexagon bolt M12x125 GB5783	1
66	336-179	Belt 36engine to blade	1

48″ &52″ Front Deck Assembly

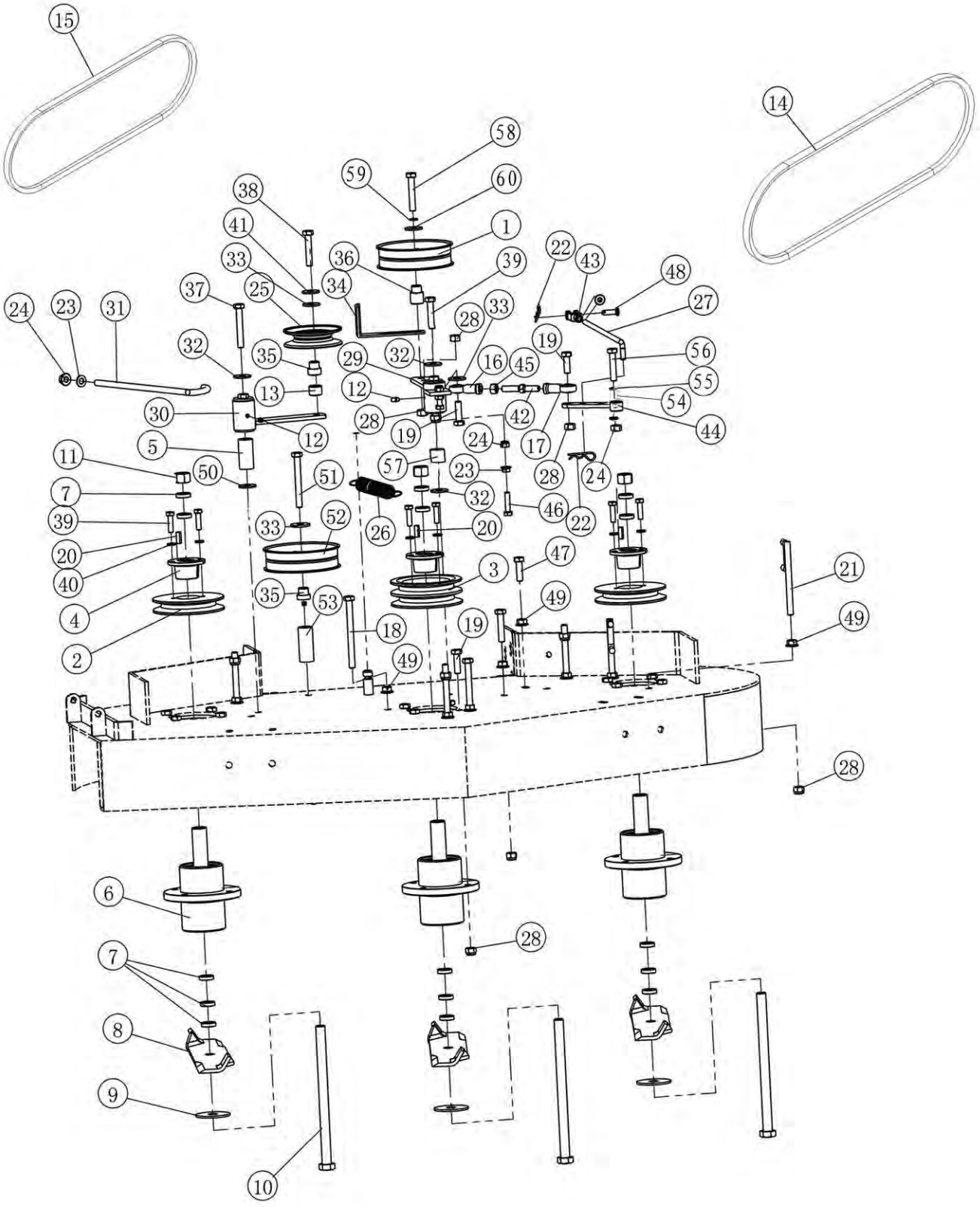

48″ &52″ Front Deck Assembly

Item No.	Part Number	Description	Qty
1	300-002	Idler Pulley	1
2	300-004	Pulley,Single	2
3	348-004	Pulley,Double	1
4	100-026	H-Bushing	3
5	100-024	Pivot Hub	1
6	100-021	Cutting Housing Assembly	3
7	100-022	Space 6	15
8	148-005	Blade 48"	3
	136-003	Blade 36" (for52")	3
9	100-023	Plain Washer3*16.5id*50od	3
10	200-023	Bolt M16*1.5*245	3
11	200-017	Hexagon Nut M16*1.5	3
12	200-026	Grease Fitting M6GB1152-89	2
13	148-011	Space 16	1
14	148-006H	Belt 48" Engine to Blade	1
	148-006	Belt 48" Engine to Blade (for52")	1
15	148-007H	Belt 48" Blade to Blade	1
	152-102	Belt 52" Blade to Blade	1
16	100-027	Rod End RH	1
17	100-028	Rod End LH	1
18	200-028	HexagonBoltM10*120GB5782-86	2
19	200-018	HexagonBoltM10*35GB5783-86	12
20	100-014	Key 6.35*6*50	3
21	100-016	Belt Guide,Spindle	2
22	200-069	Hair Pin Cotter	2
23	200-029	Nut Flange M8 GB6187-86	1
24	200-030	Nylon Nut M8 GB889-86	2
25	348-005	Idler Pulley IV	1
26	300-006	Backward Spring	1
27	348-006	Blade Rod	1
28	200-006	Nylon Nut M10 GB889-86	23
29	348-103	Blade Idler Arm Weldment	1
30	148-009	Deck Idler Arm Weldment	1
31	148-010	Rod Belt Tension Hook	1
	152-010	Rod Belt Tension Hook (for52")	1
32	100-019	Plain Washer3*10.5id*38od	5
33	200-010	Plain Washer 10 GB95-85	7
34	100-033	Belt Guide I	1
35	300-008	Bushing,Flange Pivot I	2
36	300-005	Bushing,Flange Pivot	1
37	200-020	HexagonBoltM10*70GB5782-86	1
38	200-022	HexagonBoltM10*65GB5782-86	2
39	200-025	HexagonBoltM8*30GB5783-86	7
40	200-024	Lock Washer 8 GB93-87	6
41	200-031	Lock Washer 10 GB93-87	1
42	100-030	Turn Buckle Rod	1
43	300-007	Free Drawbar	1
44	100-029	Link Idler Arm	1
45	200-027	Nut Thin M10 GB6172-86	1
46	200-049	HexagonBoltM8*40GB5783-86	2
47	200-019	HexagonBoltM10*50GB5782-86	2
48	300-003	Clevis Pin	1
49	200-016	Nut Flange M10 GB6187-86	9
50	100-015	Plain Washer 2*26id*38od	2
51	200-008	Hexagon BoltM10*110 GB5782-86	3
52	348-008	Pulley	1
53	348-009	Pivot Hub	1
54	348-104	Blade Idler Arm sleeve	1
55	200-098	Plain Washer 8 GB96	2
56	200-079	HexagonBoltM8*50GB5782-86	1
57	336-176	Bushing,Straight Pivot	2
58	200-306	Hexagon bolt M12x75 GB5782-86	1
59	200-078	Lock12 GB93-87	1
60	200-303	Plain washer 12 GB95	1

36″ 48″ &52″ Transmission Driver Assembly

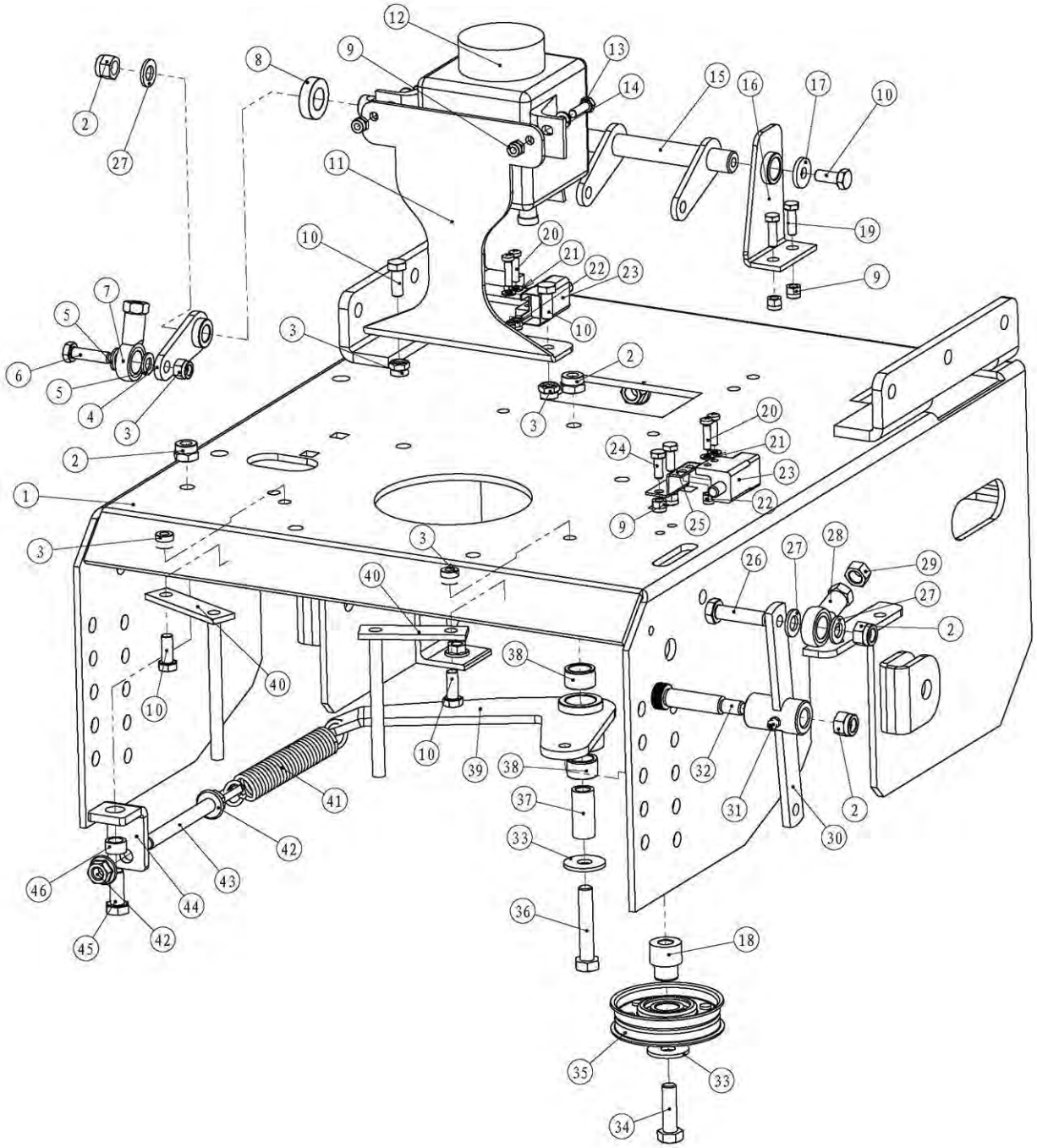

36″ 48″ &52″ Transmission Driver Assembly

Item NO.	Part Number	Description	Qty
1	336-101a	Rear Deck weldment	1
2	200-006	Nylon Nut M10 GB889-86	5
3	200-030	Nylon Nut M8 GB889-86	5
4	336-122a	Parking drawing board	1
5	200-021	Plain Washer 8 GB95-85	2
6	200-025	Hexagon Bolt M8*30 GB5783-86	1
7	300-015B	Rod End RH8	1
8	336-180	Washer 8x16idx30od	1
9	200-009	Nylon Nut M6 GB889-86	6
10	200-048	Hexagon Bolt M8*20 GB5783-86	5
11	336-136	Hydraulic oil oiler bracket	1
12	336-126	Hydro Reservoir	1
13	200-072	Hexagon Bolt M6*20 GB5783-86	2
14	200-042	Plain Washer 6 GB95-85	2
15	336-125b	Parking axis	1
16	336-127	Parking stand I	1
17	200-098	Plain washer 8 GB96	1
18	300-008	Bushing Flange Pivot 1	1
19	200-048	Hexagon Bolt M8*20 GB5783-86	2
20	200-200	Phillips pan head screws M5X20 GB818	4
21	200-138	Plain Washer 5 GB95-85	4
22	200-013	Nylon Nut M5 GB889-86	4
23	336-161	Switch	2
24	200-120	Hexagon Bolt M6*16 GB5783-86	2
25	336-160	Switch mounting plate	1
26	200-018	Hexagon Bolt M10*35 GB5783-86	1
27	200-033	Plain Washer 10 GB95-85	3
28	300-015A	Rod End RH10	1
29	200-201	Nut M10 GB6170	1
30	300-054	Blade bell crank	1
31	200-026	Grease Fitting M6 GB1152-89	1
32	300-051	Shoulder bolt	1
33	200-010	Plain Washer 10 GB96-85	2
34	200-019	Hexagon Bolt M10*40 GB5782-86	1
35	300-035	Idle puley 3	1
36	200-068	Hexagon Bolt m10x55 GB5782-86	1
37	300-032	Pivot Hub	1
38	300-033	Bushing,straight pivot	2
39	336-135	Revolved Arm Weldment	1
40	336-133	Belt Guide,Spindle	2
41	300-039	Spring	1
42	200-016	Nut Flange M10 GB6187-86	4
43	300-037	Rod thread	1
44	336-134	Back Overhang Plate	1
45	200-003	Hexagon Bolt M10*25 GB5783-86	1
46	100-032	Link Bushing 7*10.5 id*14 od	1

36 、48&52Brake And Wheel Assembly

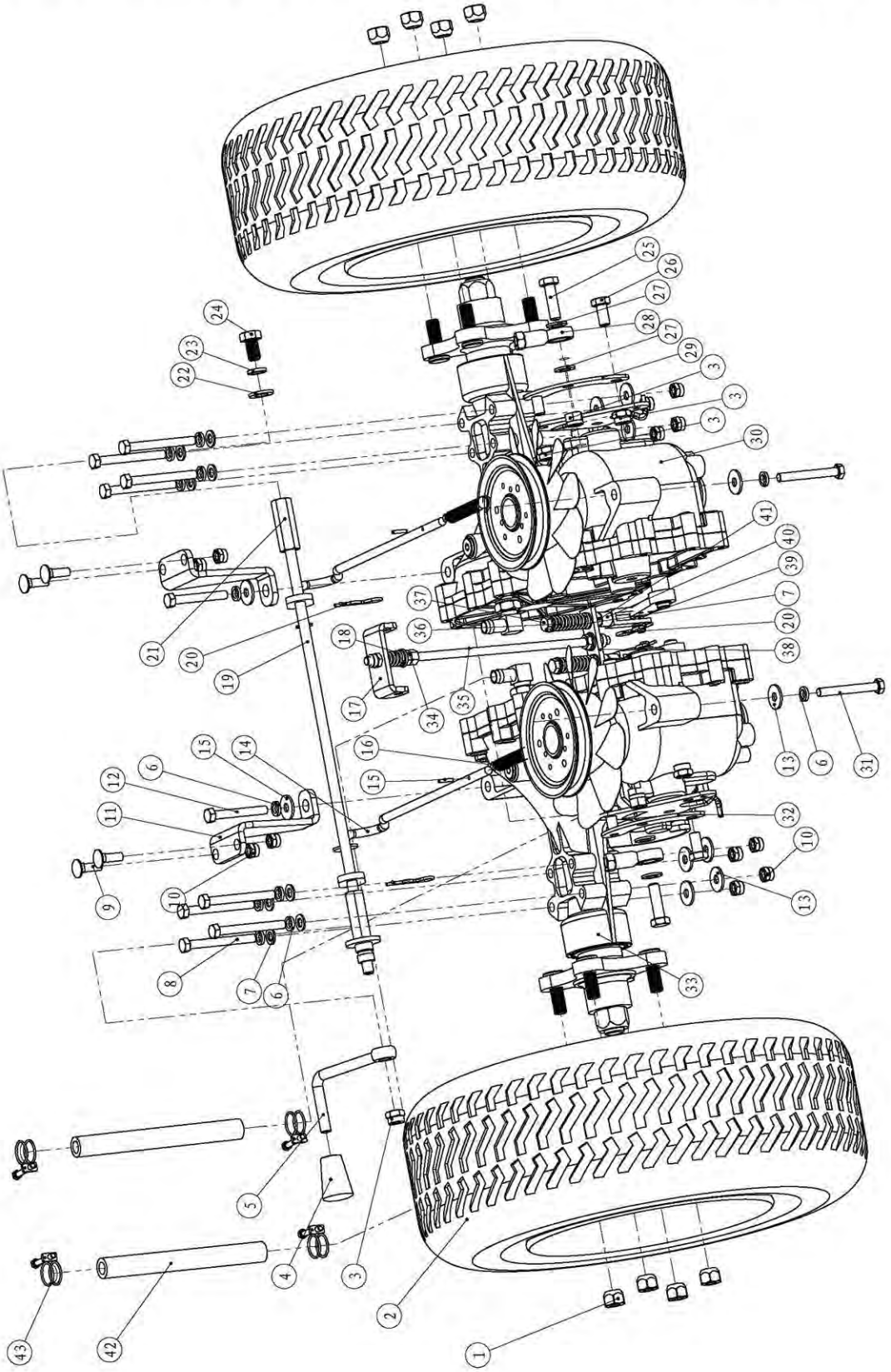

36 、48&52Brake And Wheel Assembly

Item NO.	Part Number	Description	Qty
1	200-076	Nut 1/2-20	8
2	336-106	Tir and Wheel Assembly	2
3	200-006	Nylon Nut M10 GB889-86	3
4	300-024	Shifter Knob	1
5	336-107	Neutral Handle	1
6	200-024	Lock Washer 8 GB 93-87	12
7	200-021	Plain Washer 8 GB95-85	17
8	200-188	Hexagog bolt M10x75GB5782	8
9	200-189	Square neck bolt M8x35 GB801	4
10	200-030	Nylon Nut M8 GB889-86	18
11	336-109	Hydraulic Motor support plate	2
12	200-108	Hexagon bilt M8x60GB5782	2
13	200-098	Plain washer 8GB96	14
14	336-110	Right back to the oil lever	2
15	336-111	Flexible cylindrical pin3X16	2
16	300-012	Neutral Spring	2
17	336-181	Gear Parking Plate Ⅰ	1
18	336-184	Parking Spring Ⅱ	2
19	336-114	Neutral Lever Weldment	1
20	200-069	Hair Pin Cotter	6
21	300-009	Tube with Thread	1
22	200-071	Plain Washer 12 GB95-85	1
23	200-078	Lock Washer 12 GB93-87	1
24	200-004	Hexagon Bolt M12*25 GB5783-86	1
25	200-018	Hexagon Bolt M10*35 GB5783-86	2
26	200-190	Hexagog bolt M10x20GB5783	2
27	200-010	Plain Washer 10 GB95-85	2
28	300-015A	Rod End RH10	2
29	336-117A	Welding parts right hydraulic motor control board	1
30	336-116	Right side of the hydraulic motor	1
31	200-075	Hexagon Bolt M8x65 GB5782-86	2
32	336-117B	Welding parts left hydraulic motor control board	1
33	336-118	Left side of the hydraulic motor	1
34	200-029	Nut Flange M8 GB6187-86	2
35	336-185	Reverse link	1
36	336-183	Parking Spring Ⅰ	2
37	200-108	Hexagon bilt M8x60 GB5782-86	2
38	336-182	Gear Parking Plate Ⅱ	1
39	200-307	Clevis pin 8x24 GB/T882-88	2
40	300-007	Free Bar M8	2
41	200-208	Nut M8 GB6170	2
42	336-221	Hydraulic tubing	2
43	336-222	Tubing card	2

36″ 48″ &52″ Handle Control Assembly

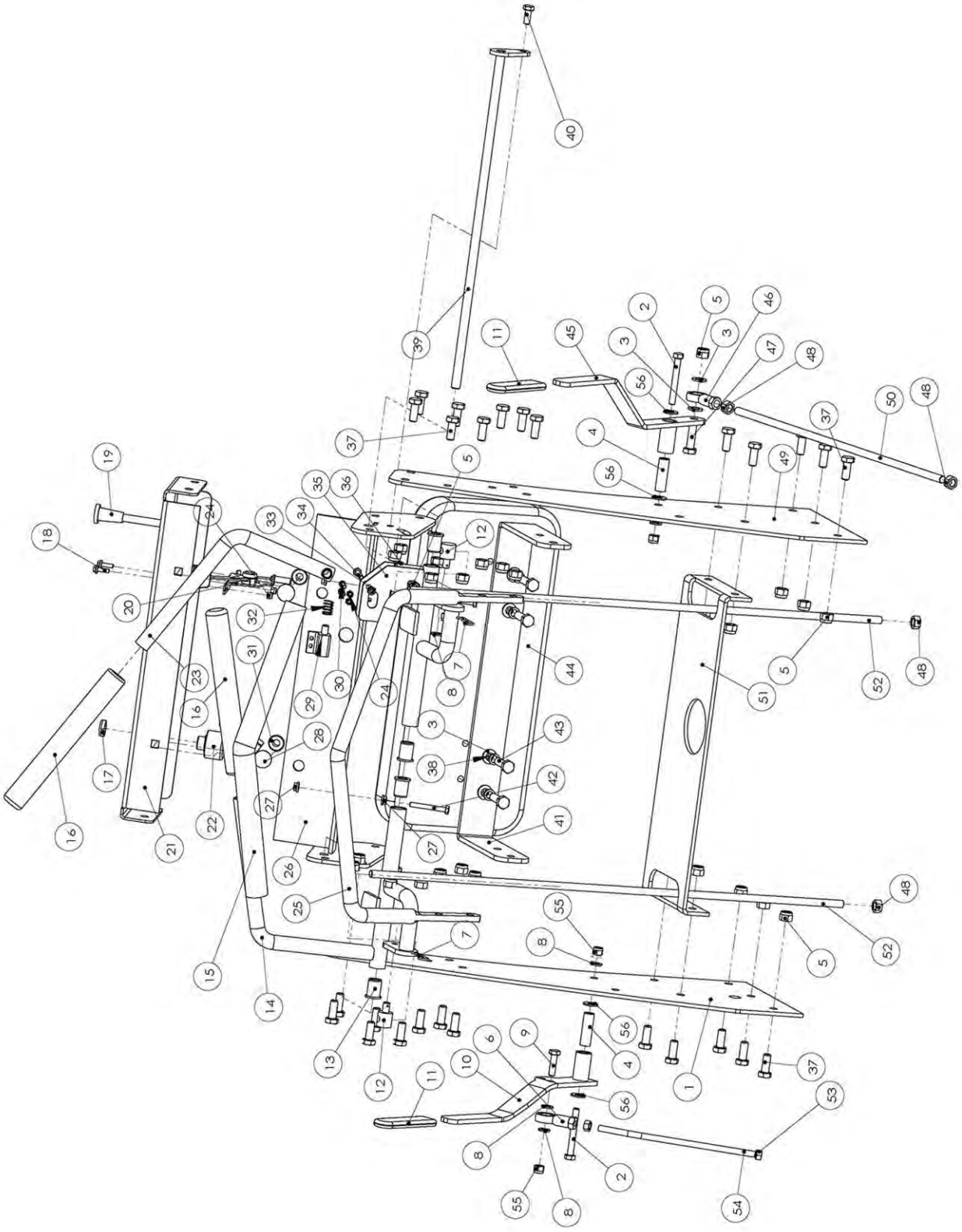

36″ 48″ &52″ Handle Control Assembly

Item NO.	Part Number	Description	Qty
1	336-200	The right support board	1
2	200-075	Hexagon Bolt M8X65 GB5782-86	2
3	200-010	Plain Washer 10 GB95-85	6
4	336-186	Parking lever support sleeve	2
5	200-006	Nylon Nut M10 GB889-86	28
6	300-015B	Rod End RH8	1
7	200-069	Hair Pin Cotter	2
8	200-021	Plain Washer 8 GB95-85	6
9	200-025	Hexagon Bolt M8*30 GB5783-86	1
10	336-120a	Handle Parking	1
11	100-045	Flat Drip	2
12	336-201	Swivel	2
13	336-202	Handrail shaft bushing	4
14	336-203	The left operating handrail weldment	1
15	336-204	Handle sheath	1
16	700-098	Grip	2
17	700-137A	The ignition switch nut	1
18	200-202	Bolt M5x16 GB5789	2
19	336-149	Throttle Cable	1
20	100-091	Throttle Control	1
21	336-205	operation panel	1
22	700-137	Ignition Switch	1
23	336-206	Right handle weldment	1
24	200-013	Nylon Nut M5 GB889-86	4
25	336-207	handle	1
26	336-208	Panel connecting weldment	1
27	200-203	Nut Flange M6 GB6187-86	4
28	200-204	Mushroom head square neck bolts M10X35 GB14	2
29	336-130a	Switch	1
30	200-200	Phillips pan head screws M5X20 GB818	2
31	200-205	Nylon self-locking flange surface nut M10 GB6183	2
32	336-209	Spring	1
33	200-009	Nylon Nut M6 GB889-86	1
34	200-044	Hexagon Bolt M6*40 GB5782-86	1
35	3360-210	The right operating handrail weldment	1
36	200-052	Hexagon Bolt M10*45 GB5782-86	1
37	200-003	Hexagon Bolt M10*25 GB5783-86	26
38	200-031	Lock Washer 10 GB93-87	4
39	366-211	The handle shaft welded parts	1
40	200-048	Hexagon Bolt M8*20 GB5783-86	1
41	336-212	Foam pad mounting plate	1
42	200-206	Hexagon bolt M6x40 GB5783-86	2
43	200-018	Hexagon bolt M10x35 GB5783-87	4
44	336-103	Foam pad	1
45	336-170a	Pull Handle	1
46	300-015A	Rod End RH10	1
47	200-207	Hexagon bolt M10x40 GB5783-86	1
48	200-201	Nut M10 GB6170	4
49	336-213	The left support board	1
50	336-214	Blade Rod	1
51	336-215	Oil tank supporting plate	1
52	336-216	Direction control lever	2
53	200-208	Nut M8 GB6170	2
54	336-217	parking lever	1
55	200-030	Nylon Nut M8 GB889-86	4
56	336-187	Washer 2x8idx20od	4

36″ 48″ &52″ Rear Deck Assembly

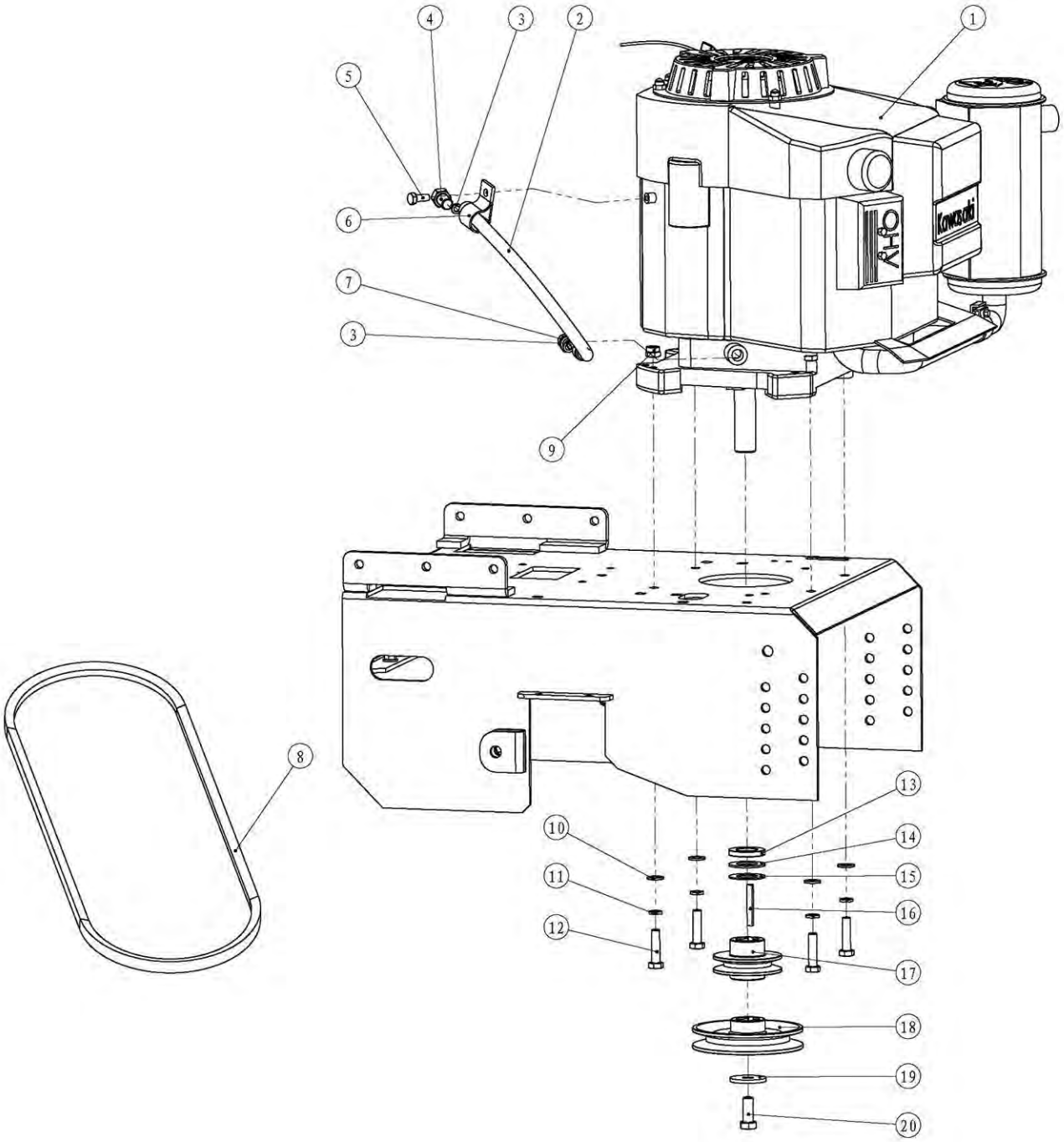

36″ 48″ &52″ Rear Deck Assembly

Item NO.	Part Number	Description	Qty
1	N/A	Engine Assembly	1
2	300-059	Discharge oil pipe	1
3	300-060	Nylon washer	2
4	300-061	Hexagon bolt M14x1.5x20	1
5	200-048	Hexagon Bolt M8*20 GB5783-86	1
6	300-062	pipe clamp	1
7	300-063	Fitting	1
8	336-155	Transmission Belt	1
9	200-006	Nylon Nut M10 GB889-86(not shown)	4
10	200-010	Plain Washer 10 GB95-85	4
11	200-031	Lock Washer 10 GB93-87	4
12	200-209	Bolt 3/8-16-1 1/2 , Engine	4
13	100-099	Spacer 6.5	1
14	336-188	Washer 1.5x26idx44od	1
15	336-189	Washer 2x26idx44od	1
16	300-067	Key6.35x6x68	1
17	300-065	Pulley ,input	1
18	300-066	Pulley,single	1
19	100-118	Plain Washer 3*12 id *38 od	1
20	200-050	Bolt 7/16-20 , Engine	1

36″ 48″ &52″ Front Caster Assembly

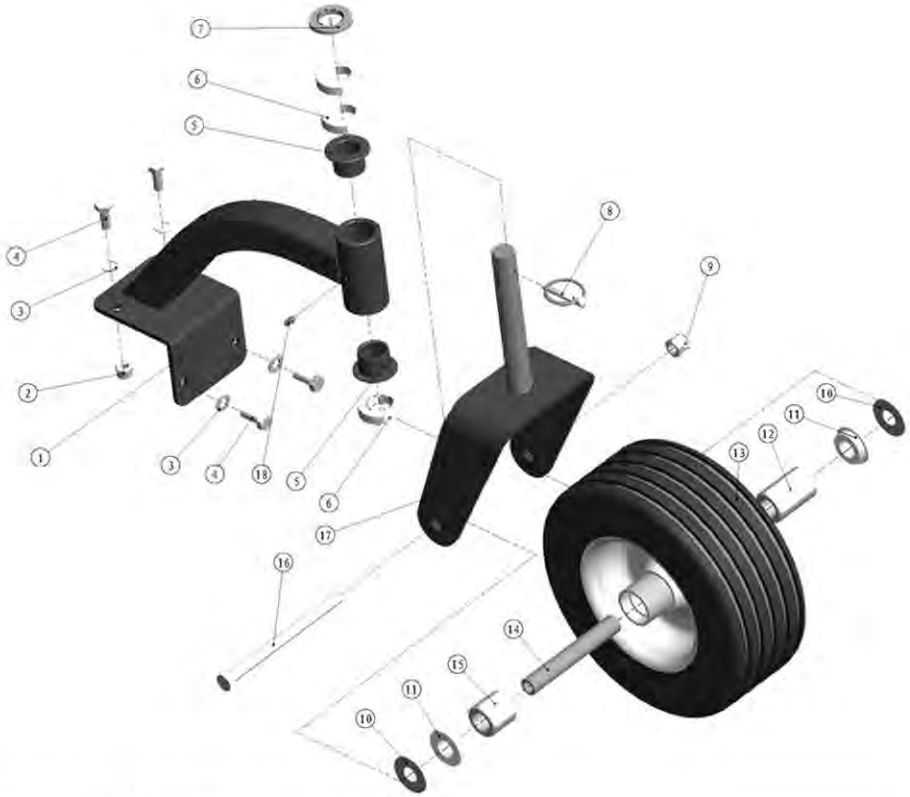

Item NO.	Part Number	Description	Qty
1	336-138	Castor Support	2
2	200-006	Nylon Nut M10 GB889-86	4
3	200-010	Plain Washer 10 GB95-85	8
4	200-003	Hexagon Bolt M10*25 GB5783-86	8
5	100-100	Bushing, Castor	4
6	100-098	Spacer 13	6
7	100-099	Spacer 6.5	2
8	100-097	Lynch Pin	2
9	200-007	Nylon Nut M12 GB889-86	2
10	336-139	Adjust the pad	4
11	700-158	Front Wheel Washer	4
12	336-141	Needle roller bearings	2
13	700-156	Tire 11x4-5	2
14	700-157	Pivot Tube, Castor	2
15	336-142	Needle roller bearings	2
16	200-133	Hexagon Bolt M12*170 GB5782-86	2
17	336-140	Castor Yoke	2
18	200-026	Grease Fitting M6 GB1152-89	2

36″ 48″ &52″ Fuel Tank Assembly

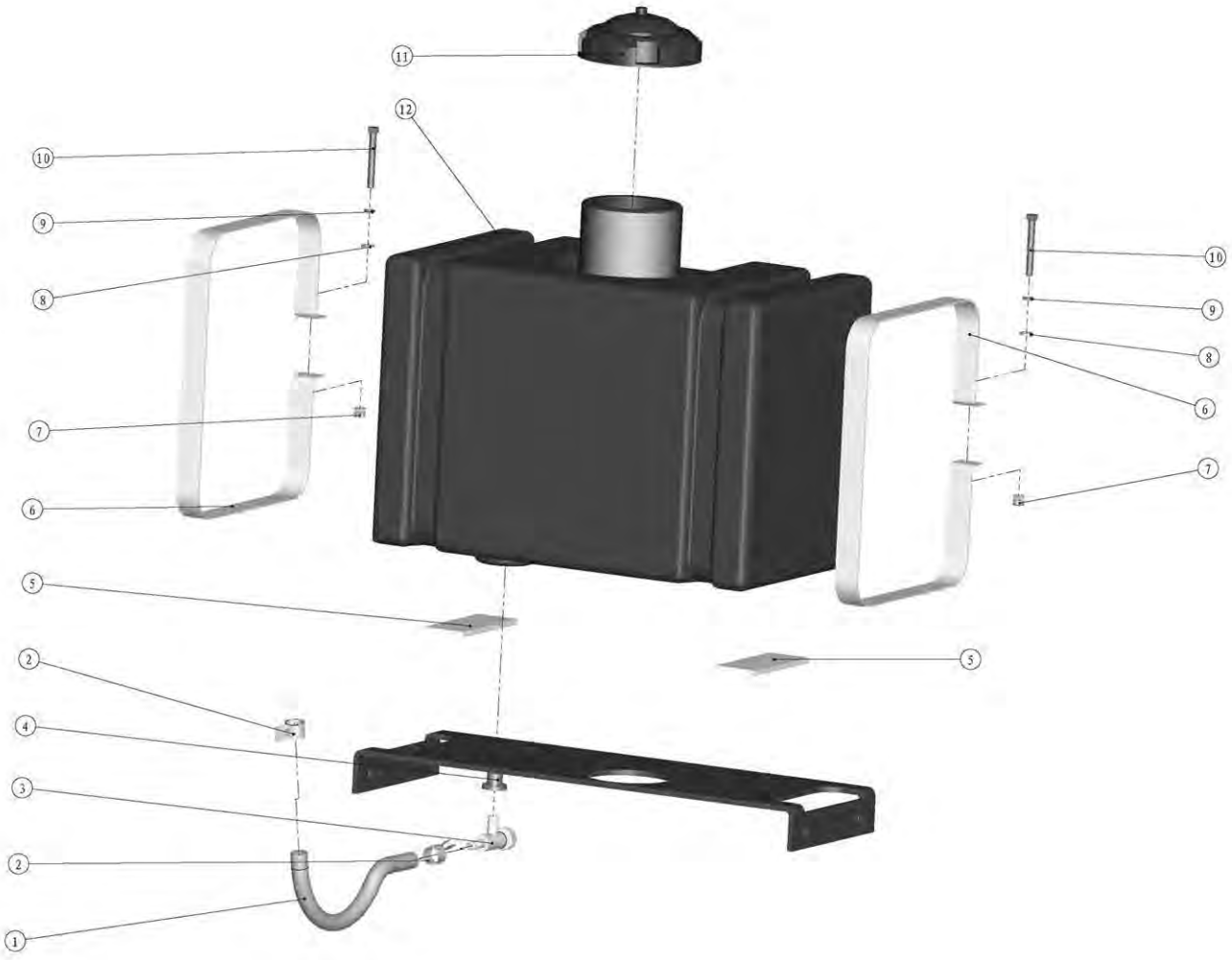

Item NO.	Part Number	Description	Qty
1	100-106	Fuel Line	1
2	200-059	Fuel Line Clamp	2
3	100-105	Fuel Shut Off Valve	1
4	100-109	Tube Insert	1
5	100-107	Tank Pad	2
6	336-143	Fuel Tank Strap	2
7	200-009	Nylon Nut M6 GB889-86	2
8	200-042	Plain Washer 6 GB95-85	2
9	200-053	Lock Washer 6 GB93-87	2
10	200-055	Hexagon Bolt M6*50 GB5782-86	2
11	336-144	Fuel Tank Cap	1
12	336-145	Fuel Tank Body	1

36″ 48″ &52″ Standing Platform Assembly

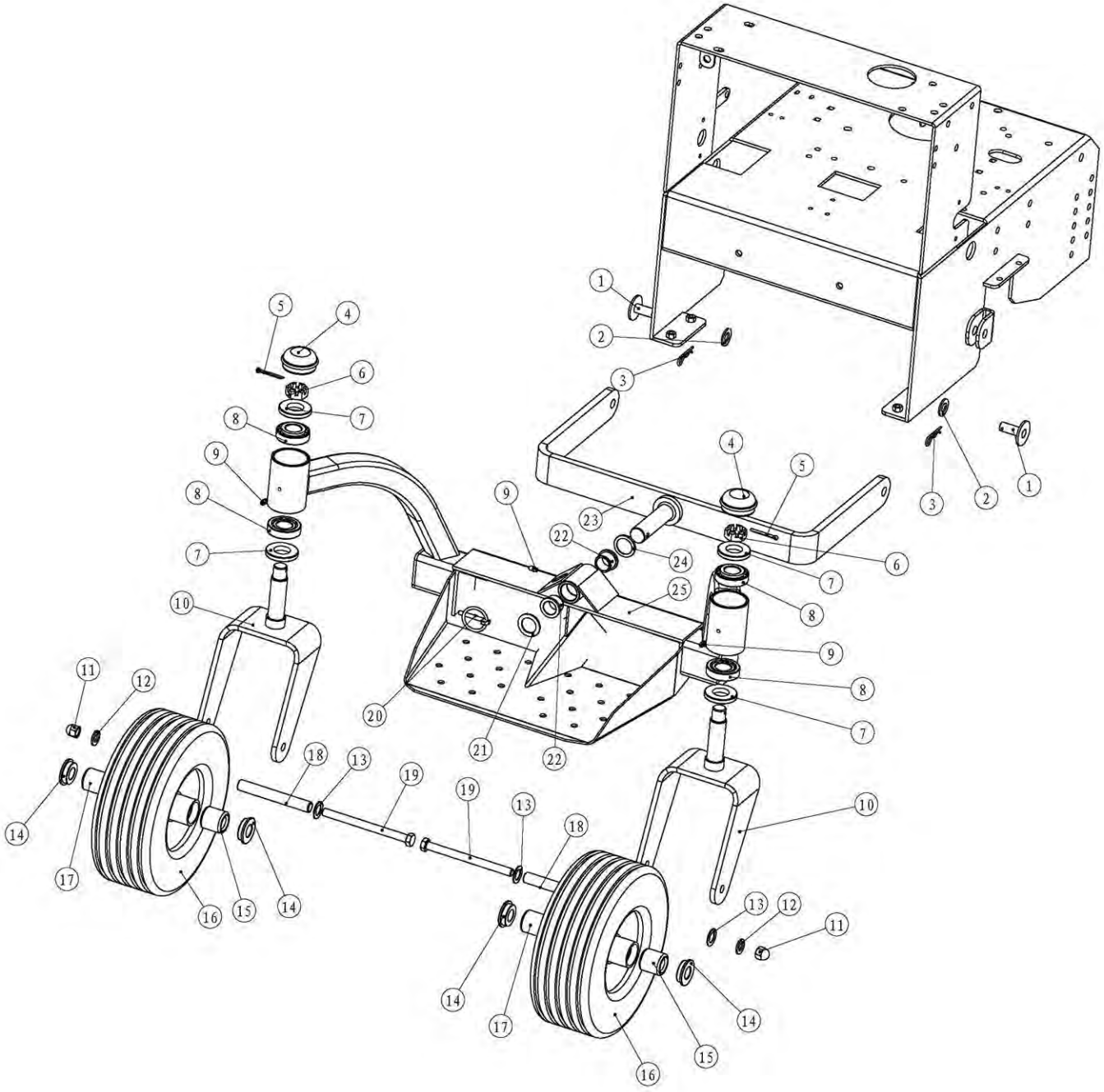

36″ 48″ &52″ Standing Platform Assembly

Item NO.	Part Number	Description	Qty
1	336-156a	Connecting pin	2
2	200-191	Plain Washer 14 GB95-85	2
3	200-069	Hair Pin Cotter	2
4	30006	Shaft cover	2
5	15033	Cotter Pin 4*36 GB91-86	2
6	30010	Hexagon slotted nuts	2
7	30005	Adjustment washer	4
8	30004	Tapered Roller Bearings 30205	4
9	200-026	Grease Fitting M6 GB1152-89	3
10	336-157	Castor Yoke	2
11	200-007	Nylon Nut M12 GB889-86	2
12	200-192	Plain Washer 12 GB95-86	4
13	336-139	Adjust the pad	4
14	700-158	Front Wheel Washer	4
15	336-141	Needle roller bearings	2
16	700-156	Tire 11x4-5	2
17	336-142	Needle roller bearings	2
18	700-157	Pivot Tube,Castor	2
19	200-133	Hexagon Bolt M12*170 GB5782-86	2
20	100-097	Lynch Pin	2
21	100-015	Plain Washer 2*26 id *38 od	1
22	336-190	Copper sleeve	2
23	336-158a	Hitch Arm	1
24	336-191	Plain Washer	1
25	336-159a	Standing Platform	1

36″ 48″ &52″ Electrical Diagram

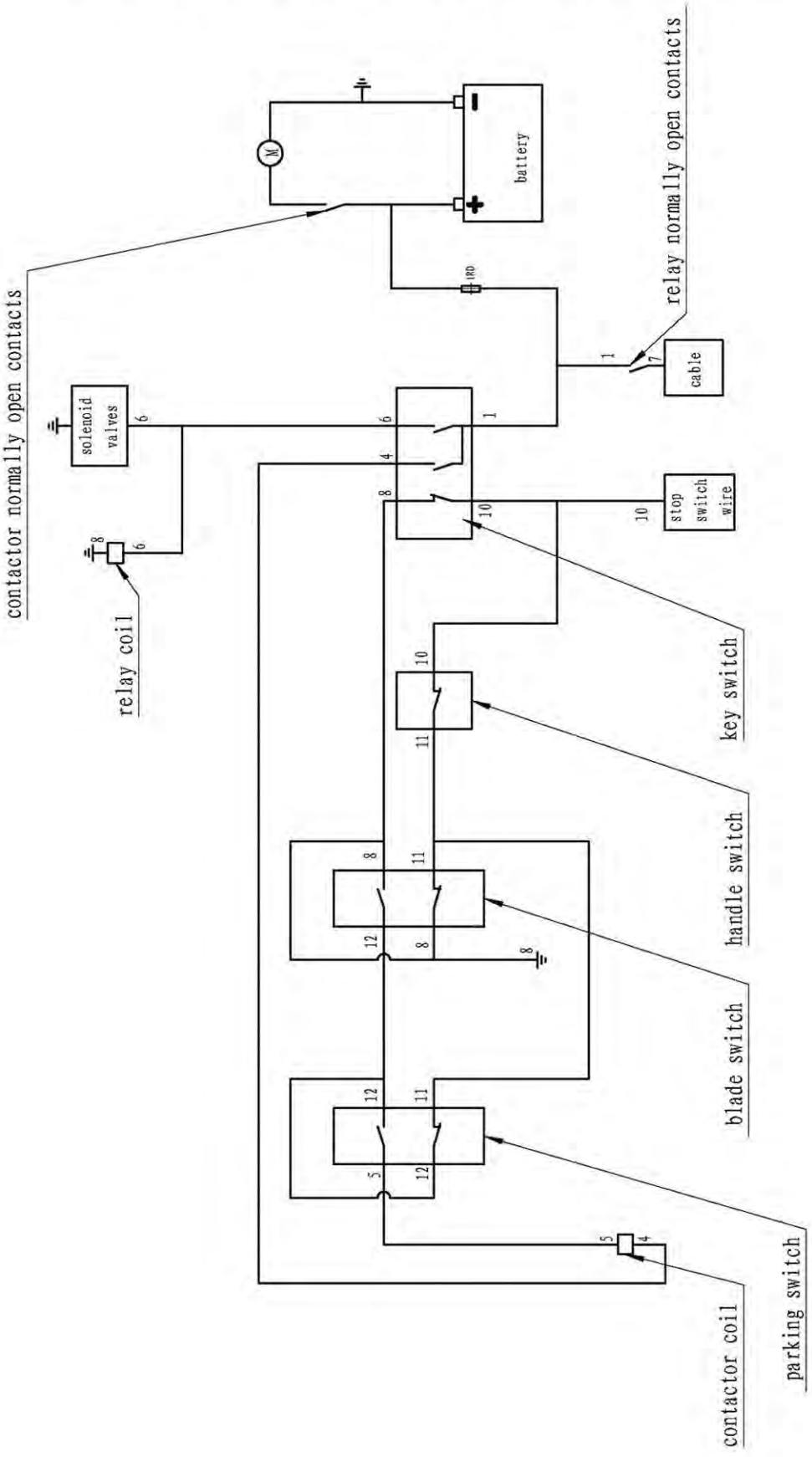

PRODUCT REGISTRATION

CUSTOMER INFORMATION

Name:_____

Business Name (if any):_____

Address:_____

City:_____State:_____Zip:_____

Phone Number:_____Fax Number:_____

Email Address:_____

DEALER INFORMATION (place of purchase)

Dealer's Name (required):_____

Dealer's Address:_____

City:_____State:_____Zip:_____

Phone Number:_____

(The remaining dealer Information will help you get warranty service faster should you need it.)

DEALER INFORMATION

Product Name and Model Number:_____

Serial Number (required for all mowers):_____

Engine Brand and Size:_____

Engine Serial Number:_____

(Engines are warranted through their respective manufacturers. Please see your engine manual for more details.)

Signature_____Date of Purchase:_____

KEEP YOUR RECEIPT WITH A COPY OF THIS REGISTRATION FORM

Mail your completed form to:
Havener Enterprises, Inc.
368 S. Michigan Ave.
Bradley, IL 60915

Email your completed form to:
info@havenerent.com

Fax your completed form to:
888.785.1348

Your first answer in product service is your authorized Bradley dealer!

Your product warranty is only valid if this form is completed, signed, and returned to Havener Enterprises, Inc. within two weeks of product purchase. See the warranty statement for more details.

☐check here to decline communication by mail or email

Cut here or make a copy